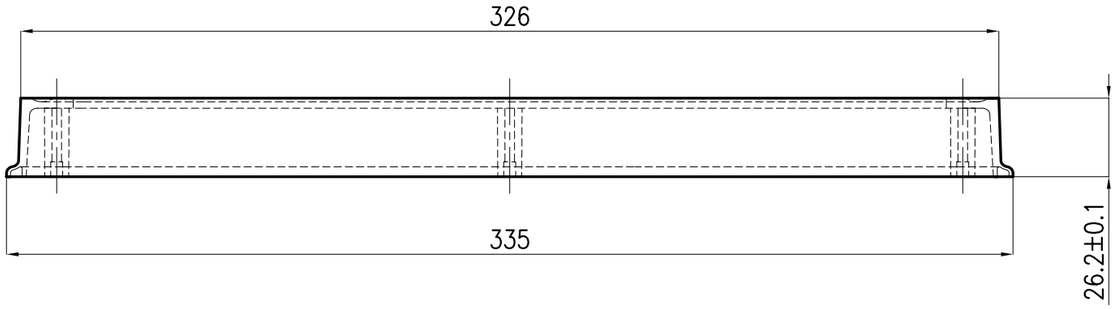

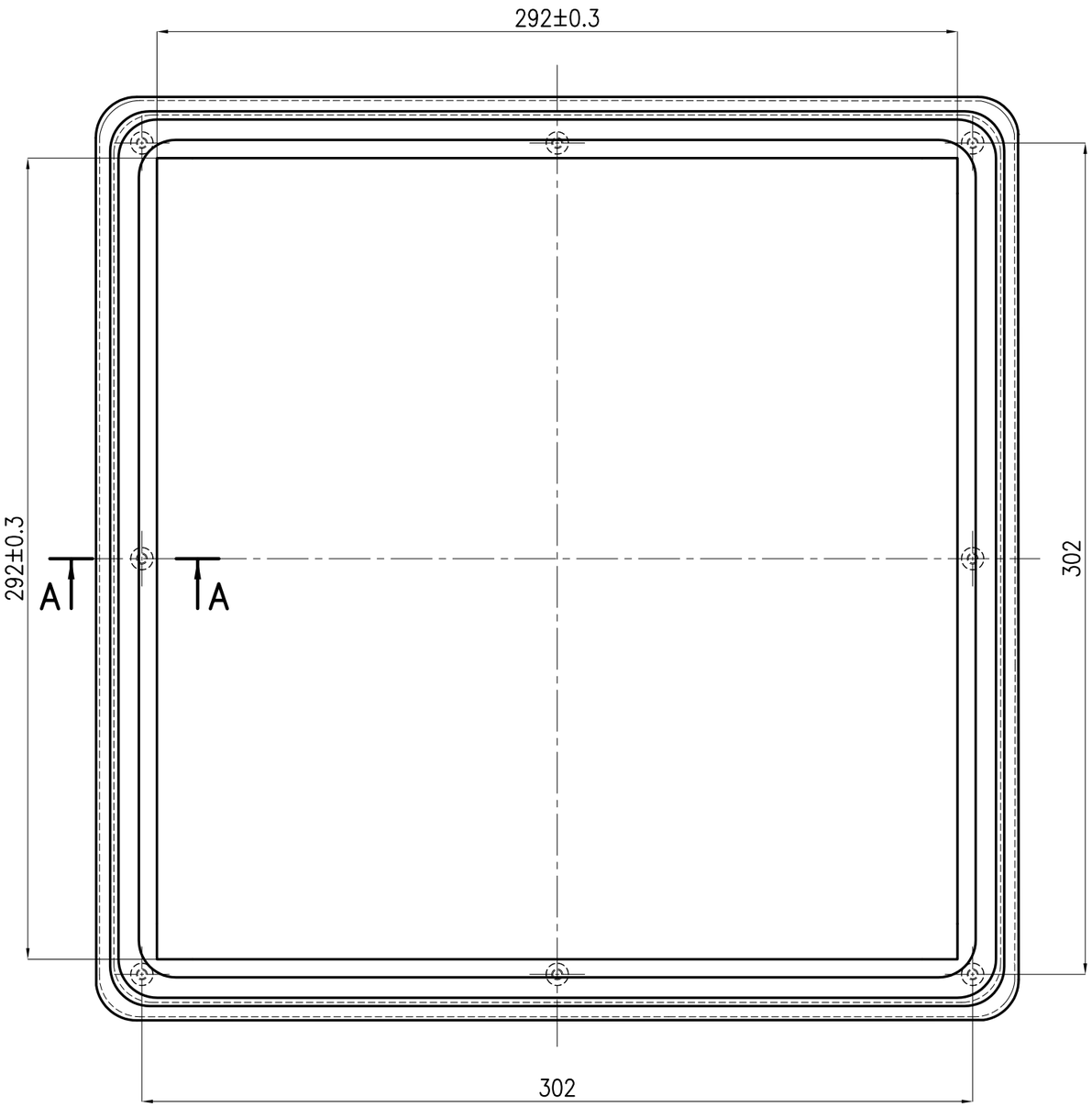

Sez. A–A
scala 2:1

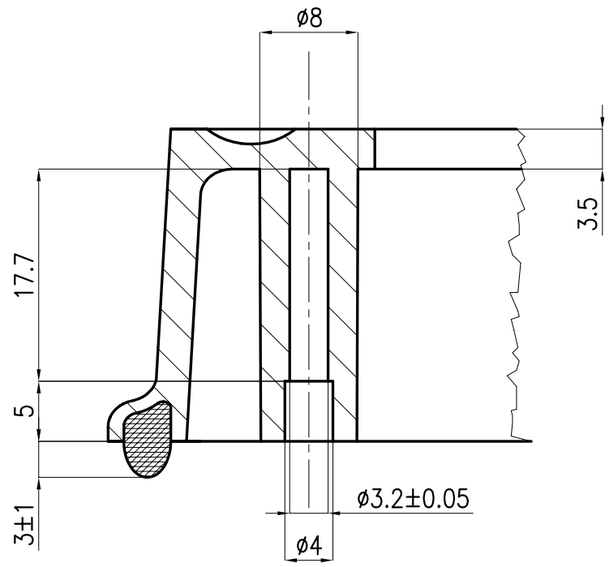

Rev.	Description of the modification	Draft	Checked	Approved	Date
0	FIRST ISSUE	P.D.P.	F.B.	F.B.	20/03/06

Unspecified tolerances precision UNI–EN 22768–1 medium			
over 0 to 6	±0.1	over 400 to 1000	±0.8
over 6 to 30	±0.2	over 1000 to 2000	±1.2
over 30 to 120	±0.3	over 2000 to 4000	±2
over 120 to 400	±0.5	over 4000	–

Roughness Ra µm .
Unspecified radiuses .
Gross weight Kg .
Unspecified chamfers .
Treatment .
Material PC/ABS

Fandis colors of engineering

Description: FPF–A adapter with gasket

Part number: FPFA20–XXXXG
Q.ty .
Drawing number: TDF–A28
Scale 1:2
Sheet/of 1–1
Format A3

This drawing is Fandis's S.p.A. property. It can not be copied, reproduced, disclosed to other without written approval of Fandis