Simpex Electronic AG
Binzackerstrasse 33
CH-8622 Wetzikon
Telefon +41-44-931 10 40
Telefax +41-44-931 10 41

www.simpex.ch
contact@simpex.ch

CHE-108.018.777 MWST

USER MANUAL

TG2480H

CUSTOM®

CUSTOM S.p.A.
Via Berettine 2/B
43010 Fontevivo (PARMA) - Italy
Tel. : +39 0521-680111
Fax : +39 0521-610701
http: www.custom.biz

Customer Service Department:
Email : support@custom.it

© 2017 CUSTOM S.p.A. – Italy.
All rights reserved. Total or partial reproduction of this manual in whatever form, whether by printed or electronic means, is forbidden. While guaranteeing that the information contained in it has been carefully checked, CUSTOM S.p.A. and other entities utilized in the realization of this manual bear no responsibility for how the manual is used. Information regarding any errors found in it or suggestions on how it could be improved are appreciated. Since products are subject to continuous check and improvement, CUSTOM S.p.A. reserves the right to make changes in information contained in this manual without prior notification.

The pre-installed multimedia contents are protected from Copyright CUSTOM S.p.A. Other company and product names mentioned herein may be trademarks of their respective companies. Mention of third-party products is for informational purposes only and constitutes neither an endorsement nor a recommendation. CUSTOM S.p.A. assumes no responsibility with regard to the performance or use of these products.

THE IMAGES USED IN THIS MANUAL ARE USED AS AN ILLUSTRATIVE EXAMPLES. THEY COULDN'T REPRODUCE THE DESCRIBED MODEL FAITHFULLY.

**UNLESS OTHERWISE SPECIFIED, THE INFORMATION GIVEN IN THIS MANUAL
ARE REFERRED TO ALL MODELS IN PRODUCTION AT THE ISSUE DATE OF THIS DOCUMENT.**

GENERAL INSTRUCTIONS
CUSTOM S.p.A. declines all responsibility for accidents or damage to persons or property occurring as a result of tampering, structural or functional modifications, unsuitable or incorrect installations, environments not in keeping with the equipment's protection degree or with the required temperature and humidity conditions, failure to carry out maintenance and periodical inspections and poor repair work.

GENERAL SAFETY INFORMATION
Your attention is drawn to the following actions that could compromise the characteristics of the product:

- Read and retain the instructions which follow.
- Follow all indications and instructions given on the device.
- Make sure that the surface on which the device rests is stable. If it is not, the device could fall, seriously damaging it.
- Make sure that the device rests on a hard (non-padded) surface and that there is sufficient ventilation.
- Do not fix indissolubly the device or its accessories such as power supplies unless specifically provided in this manual.
- When positioning the device, make sure cables do not get damaged.
- [Only OEM equipment] The equipment must be installed in a kiosk or system that provides mechanical, electrical and fire protection.
- The mains power supply must comply with the rules in force in the Country where you intend to install the equipment.
- Make sure that there is an easily-accessible outlet with a capacity of no less than 10A closely to where the device is to be installed.
- Make sure the power cable provided with the appliance, or that you intend to use is suitable with the wall socket available in the system.
- Make sure the electrical system that supplies power to the device is equipped with a ground wire and is protected by a differential switch.
- Before any type of work is done on the machine, disconnect the power supply.
- Use the type of electrical power supply indicated on the device label.
- These devices are intended to be powered by a separately certified power module having an SELV, non-energy hazardous output. (IEC60950-1 second edition).
- [Only POS equipment] The energy to the equipment must be provided by power supply approved by CUSTOM S.p.A.
- Take care the operating temperature range of equipment and its ancillary components.
- Do not block the ventilation openings.
- Do not insert objects inside the device as this could cause short-circuiting or damage components that could jeopardize printer functioning.
- Do not carry out repairs on the device yourself, except for the normal maintenance operations given in the user manual.
- The equipment must be accessible on these components only to trained, authorized personnel.
- Periodically perform scheduled maintenance on the device to avoid dirt build-up that could compromise the correct, safe operation of the unit.
- Do not touch the head heating line with bare hands or metal objects. Do not perform any operation inside the printer immediately after printing because the head and motor tend to become very hot.
- Use consumables approved by CUSTOM S.p.A.

THE CE MARK AFFIXED TO THE PRODUCT CERTIFY THAT THE PRODUCT SATISFIES THE BASIC SAFETY REQUIREMENTS.

The device is in conformity with the essential Electromagnetic Compatibility and Electric Safety requirements laid down in Directives 2006/95/CE and 2004/108/CE inasmuch as it was designed in conformity with the provisions laid down in the following Standards:

- EN 55022 Class B *(Limits and methods of measurements of radio disturbance characteristics of Information Technology Equipment)*
- EN 55024 *(Information Technology Equipment – Immunity characteristics – Limits and methods of measurement)*
- EN 60950-1 *(Safety of information equipment including electrical business equipment)*

The device is in conformity with the essential requirements laid down in Directives 1999/05/CE about devices equipped with intentional radiators The Declaration of Conformity and other available certifications can be request to support@custom.it please providing the correct part number shown on product label or in the invoice.

GUIDELINES FOR THE DISPOSAL OF THE PRODUCT

The crossed-out rubbish bin logo means that used electrical and electronic products shall NOT be mixed with unsorted municipal waste. For more detailed information about recycling of this product, refer to the instructions of your country for the disposal of these products.

- Do not dispose of this equipment as miscellaneous solid municipal waste, but arrange to have it collected separately.
- The re-use or correct recycling of the electronic and electrical equipment (EEE) is important in order to protect the environment and the wellbeing of humans.
- In accordance with European Directive WEEE 2002/96/EC, special collection points are available to which to deliver waste electrical and electronic equipment and the equipment can also be handed over to a distributor at the moment of purchasing a new equivalent type.
- The public administration and producers of electrical and electronic equipment are involved in facilitating the processes of the re-use and recovery of waste electrical and electronic equipment through the organisation of collection activities and the use of appropriate planning arrangements.
- Unauthorised disposal of waste electrical and electronic equipment is punishable by law with the appropriate penalties.

The format used for this manual improves use of natural resources reducing the quantity of necessary paper to print this copy.

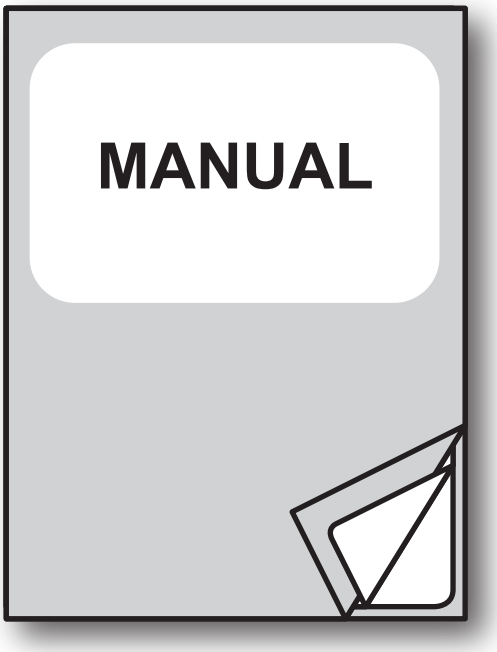

For details on the commands,
refer to the manual with code. **77200000001100**

TABLE OF CONTENTS

1 INTRODUCTION . . . 9

2 IDENTIFICATION OF THE MODELS . . . 11

3 DESCRIPTION . . . 13
3.1 Box contents . . . 13
3.2 Device components . . . 14
3.3 Product label . . . 17
3.4 Key functions: power up . . . 18
3.5 Key functions: standby . . . 19
3.6 Status messages . . . 20

4 INSTALLATION . . . 21
4.1 Fastening . . . 21
4.2 Paper roll holder assembly . . . 24
4.3 Collections . . . 26
4.4 Pinout . . . 27
4.5 Driver and SDK . . . 29

5 OPERATION . . . 31
5.1 Device opening . . . 31
5.2 Device closing . . . 32
5.3 Adjusting paper width . . . 34
5.4 Adjusting paper stock . . . 35
5.5 Switch the device ON . . . 36
5.6 Loading the paper roll . . . 37
5.7 Anti-jamming system . . . 39
5.8 Issuing ticket . . . 40

6 CONFIGURATION . . . 59
6.1 Configuration mode . . . 59
6.2 Setup report . . . 60
6.3 Printer status . . . 61
6.4 Printer parameters . . . 62
6.5 Hexadecimal dump . . . 65

7 MAINTENANCE . . . 67
7.1 Paper jam . . . 67
7.2 Planning of cleaning operations . . . 70
7.3 Cleaning . . . 71
7.4 Upgrade firmware . . . 75

8 SPECIFICATION 77
8.1 Hardware specifications 77
8.2 Character specifications 80
8.3 Device dimensions 80
8.4 Power supply dimensions cod.963GE020000046 (optional) 84
8.5 Paper specification 85
8.6 Character sets 86

9 CONSUMABLES 95

10 ACCESSORIES 97
10.1 Adapter cable for power supplys. 98

11 ALIGNMENT 99
11.1 Calibration 100
11.2 Alignment parameters 102
11.3 Printing area 104

12 TECHNICAL SERVICE 105

1 INTRODUCTION

This document is divided into sections and chapters. Each chapter can be reached by the index at the beginning of this document. The index can be reached by the button on each page as shown in the diagram below.

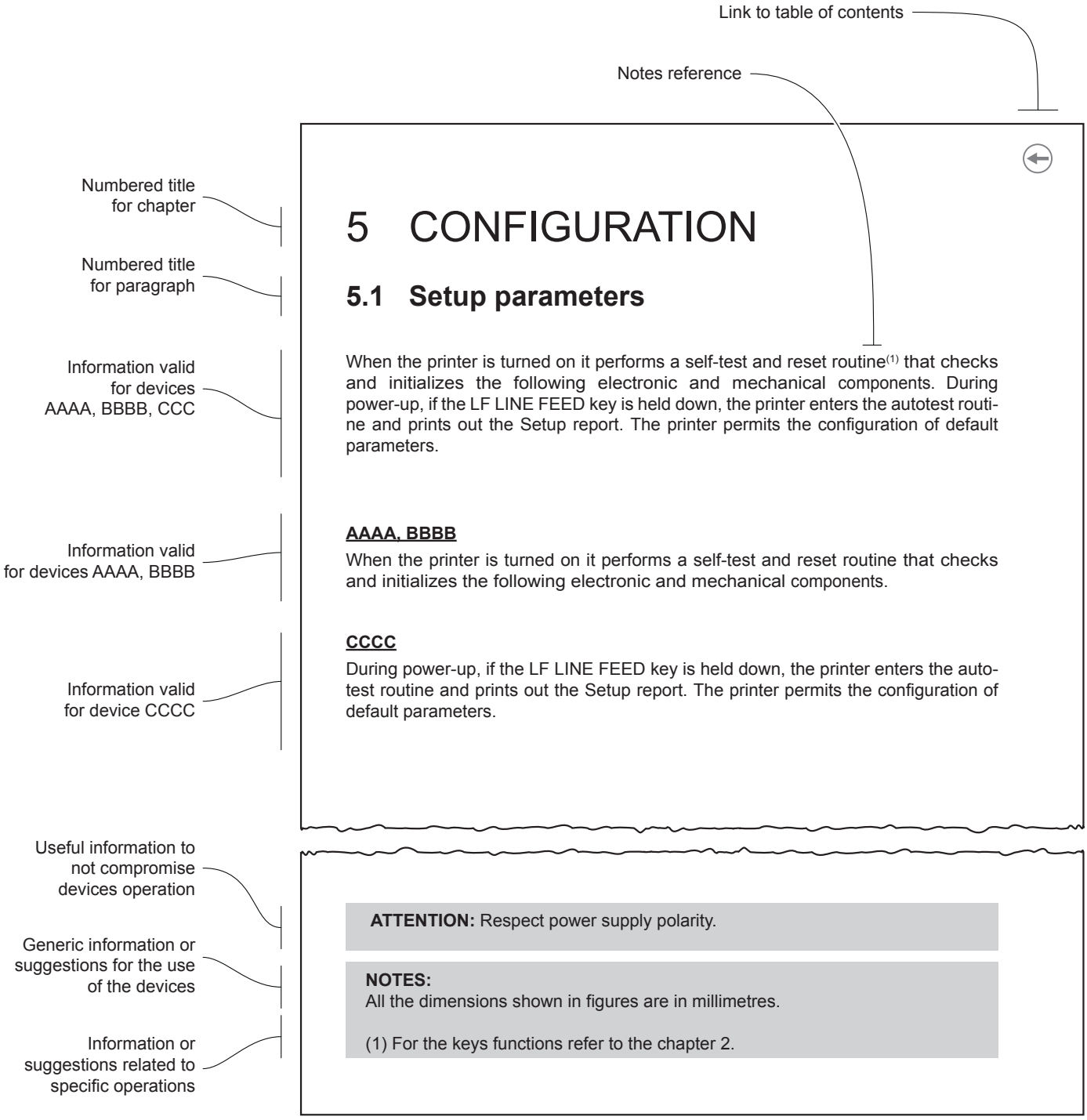

2 IDENTIFICATION OF THE MODELS

NOMENCLATURE	DESCRIPTION
TG2480H STD	Standard model
TG2480H EJC	Model with motorized ejector
TG2480H TKOUT	Model with ticket out sensor

3 DESCRIPTION

3.1 Box contents

Remove the device from its carton being careful not to damage the packing material so that it may be re-used if the printer is to be transported in the future.
Make sure that all the components illustrated below are present and that there are no signs of damage. If there are, contact Customer Service

1. Power supply cable
2. Fixing screws for paper roll holder
3. Paper roll
4. Installation instruction sheet
5. Device (all models)
6. Paper roll holder

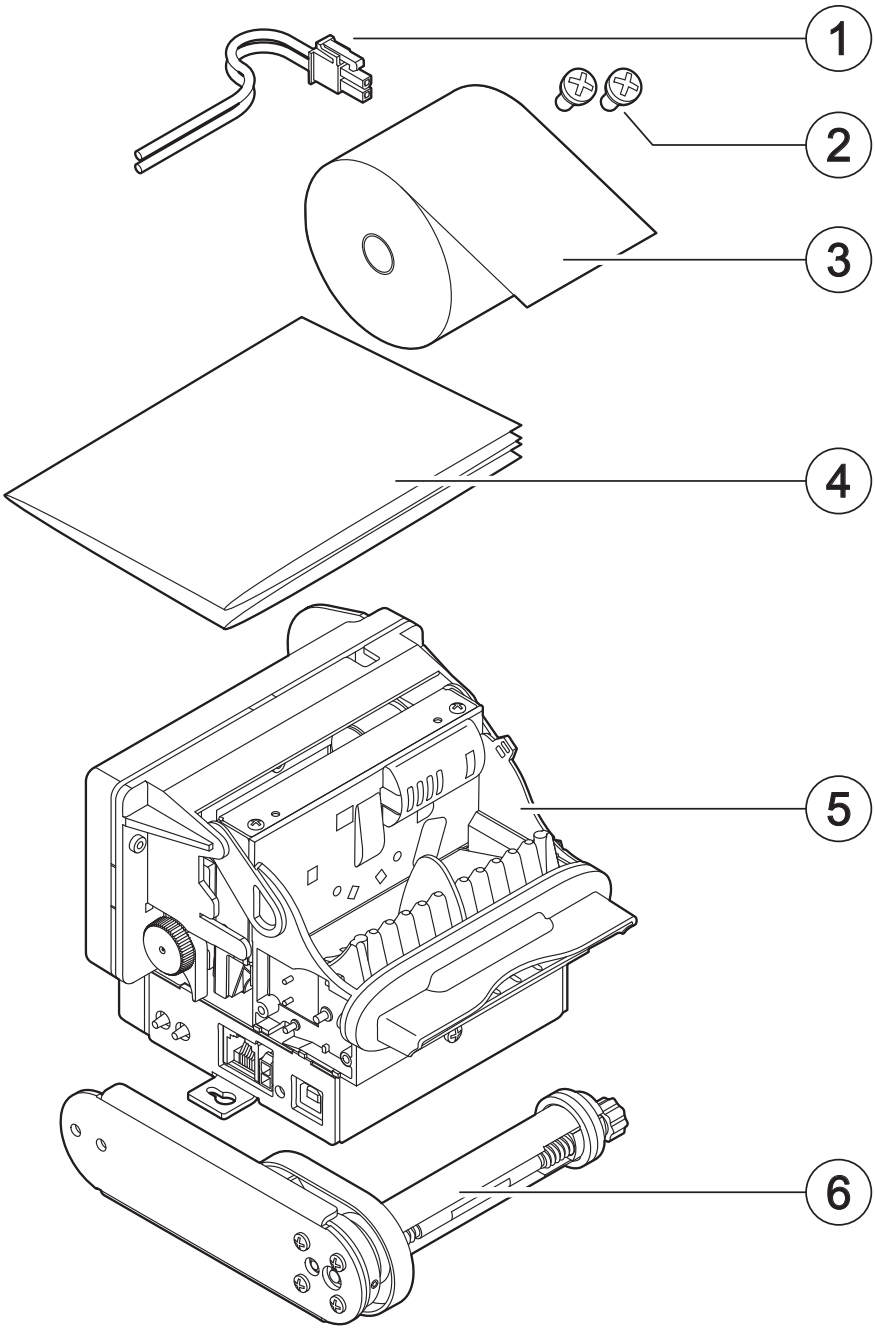

- Open the device packaging.
- Take out the device.
- Take out the rest of the content.
- Keep the box, trays and packing materials in the event the printer must be transported/shipped in the future.

3.2 Device components

TG2480H STD

1. Paper width adjustment
2. Paper roll holder pin
3. Low paper sensor
4. Lever for paper stock adjustment
5. Paper roll holder
6. Printing head
7. Cutter group
8. Sensor for forced withdrawal of the ticket
9. Inspection door
10. Paper out
11. Unlocking hook for cutter group
12. Device chassis
13. USB port
14. Status LED
15. Power supply port
16. Serial port
17. Paper in
18. Paper in presence and black mark sensor
19. Rear cover
20. Paper jam sensor
21. FEED key
22. PRINT key
23. Unlocking lever for platen roller
24. Platen roller manual feed

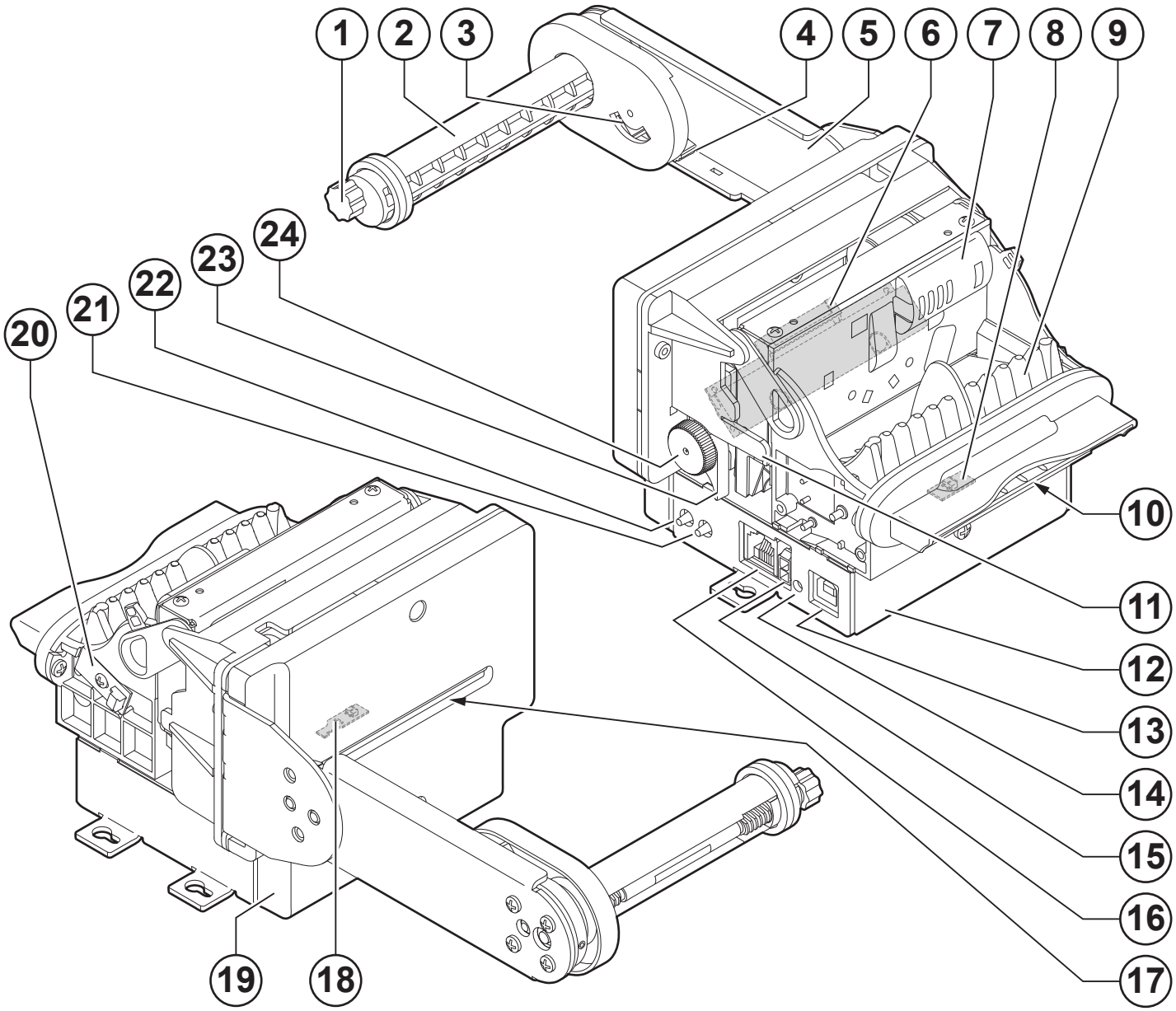

TG2480H EJC

1. Paper width adjustment
2. Paper roll holder pin
3. Low paper sensor
4. Lever for paper stock adjustment
5. Printing head
6. Cutter group
7. Ejector group
8. Paper out
9. Paper out presence sensor
10. Unlocking hook for cutter group
11. Device chassis
12. USB port
13. Status LED
14. Power supply port
15. Serial port
16. FEED key
17. PRINT key
18. Paper roll holder
19. Paper in
20. Paper in presence and black mark sensor
21. Rear cover
22. Unlocking lever for platen roller
23. Platen roller manual feed

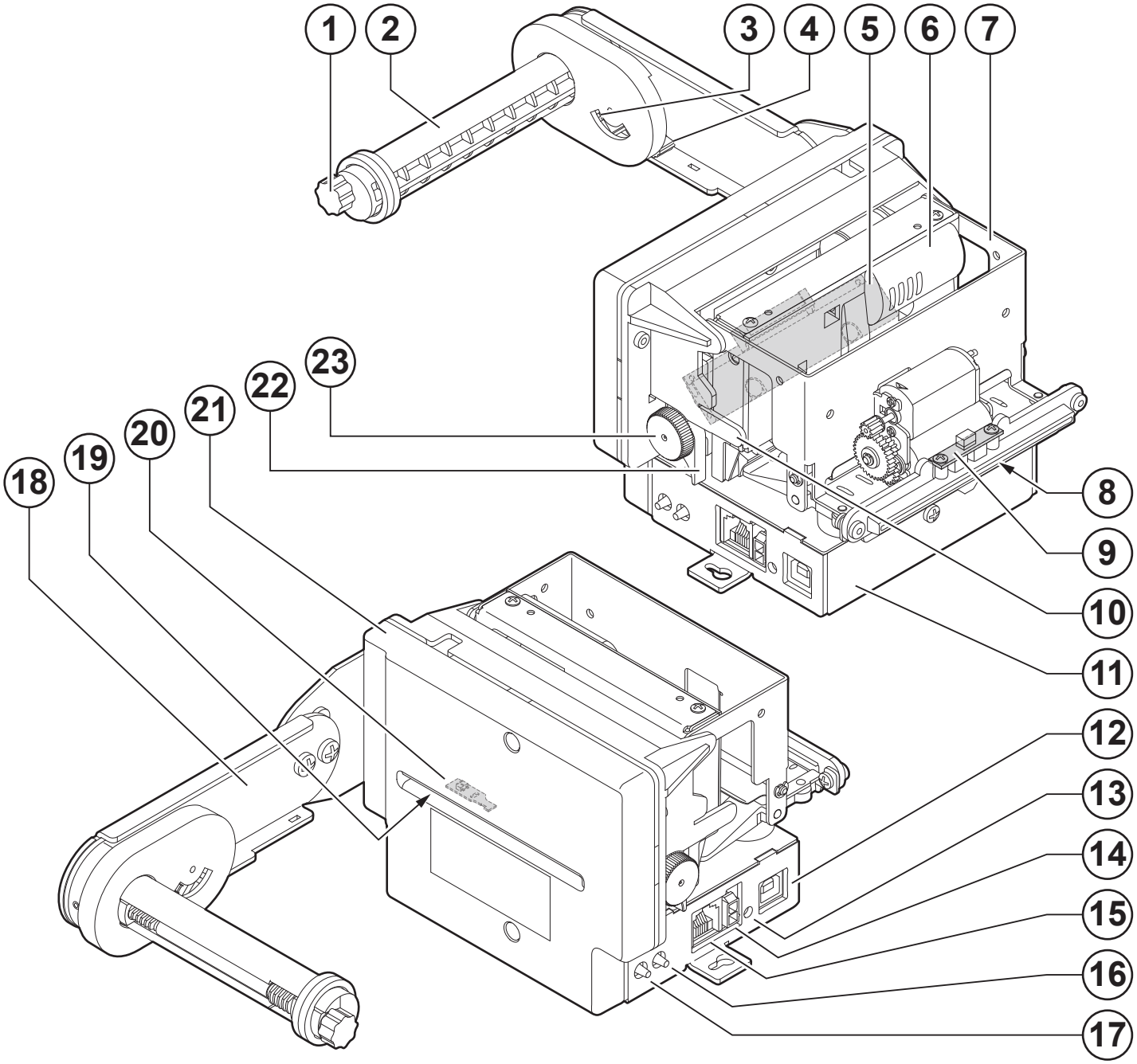

TG2480H TKOUT

1. Paper width adjustment
2. Paper roll holder pin
3. Low paper sensor
4. Lever for paper stock adjustment
5. Paper roll holder
6. Printing head
7. Cutter group
8. Paper out presence sensor
9. Inspection door
10. Paper out
11. Unlocking hook for cutter group
12. Device chassis
13. USB port
14. Status LED
15. Power supply port
16. Serial port
17. Paper in
18. Paper in presence and black mark sensor
19. Rear cover
20. Paper jam sensor
21. FEED key
22. PRINT key
23. Unlocking lever for platen roller
24. Platen roller manual feed

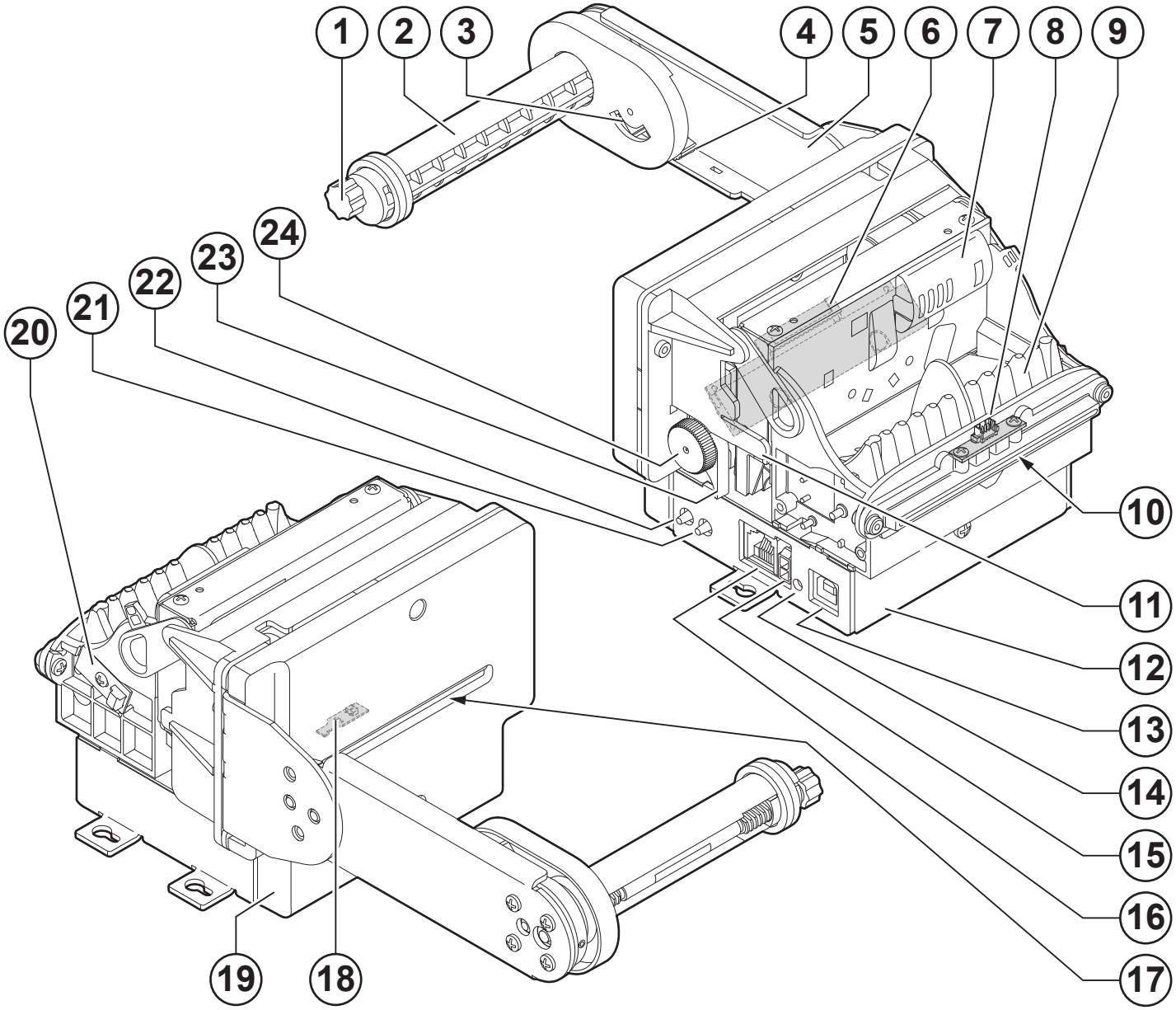

3.3 Product label

PC = Product code (14 digits)
SN = Serial number
HW = Hardware release

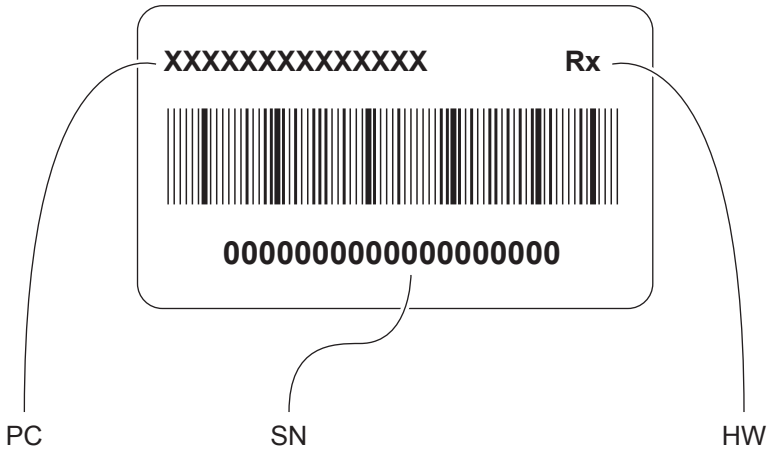

3.4 Key functions: power up

The following figure shows the functions of device's keys according to the operating condition.

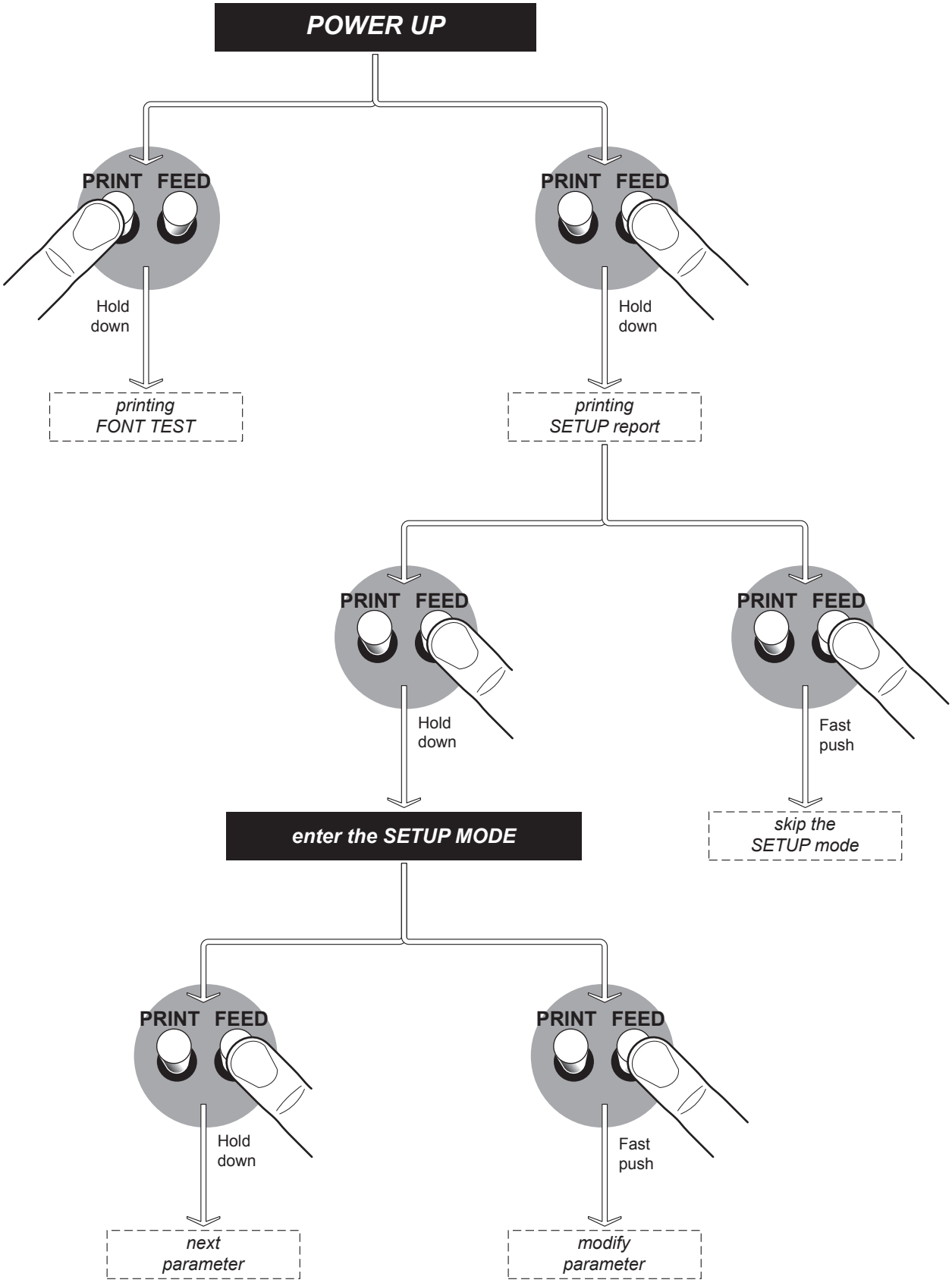

3.5 Key functions: standby

The following figure shows the functions of device's keys according to the operating condition.

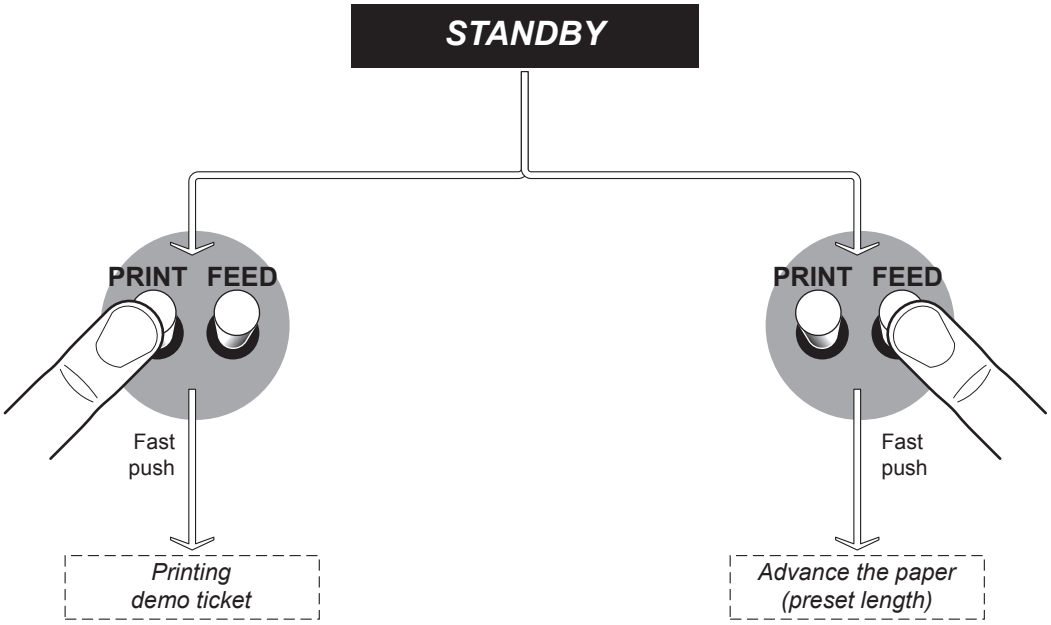

3.6 Status messages

The Status LED indicates hardware status of device. Given in the table below are the various led signals and the corresponding device status.

STATUS LED		DESCRIPTION
-	***OFF***	DEVICE OFF
GREEN	***ON***	DEVICE ON: NO ERROR
GREEN COMMUNICATION STATUS	***x 1***	RECEIVE DATA
	x 2	HEADING OVER TEMPERATURE
	x 3	PAPER END
	x 4	POWER SUPPLY VOLTAGE INCORRECT
	x 5	RECEPTION ERROR (PARITY, FRAME ERROR, OVERRUN ERROR)
	x 6	COMMAND NOT RECOGNIZED
	x 7	COMMAND RECEPTION TIME OUT
	x 8	INSPECTION DOOR OPEN (1)
	x 9	PAPER JAM (1)
	x 10	LOW PAPER
GREEN UNRECOVERABLE ERROR	***x 11***	CUTTER ERROR

NOTE:
(1) : Only for TG2480H STD and TG2480H TKOUT.

4 INSTALLATION

4.1 Fastening

TG2480H EJC

The device is provided with three fixing holes on the bottom of device (see following figure). To fasten the device on a panel, use three M3 screws.

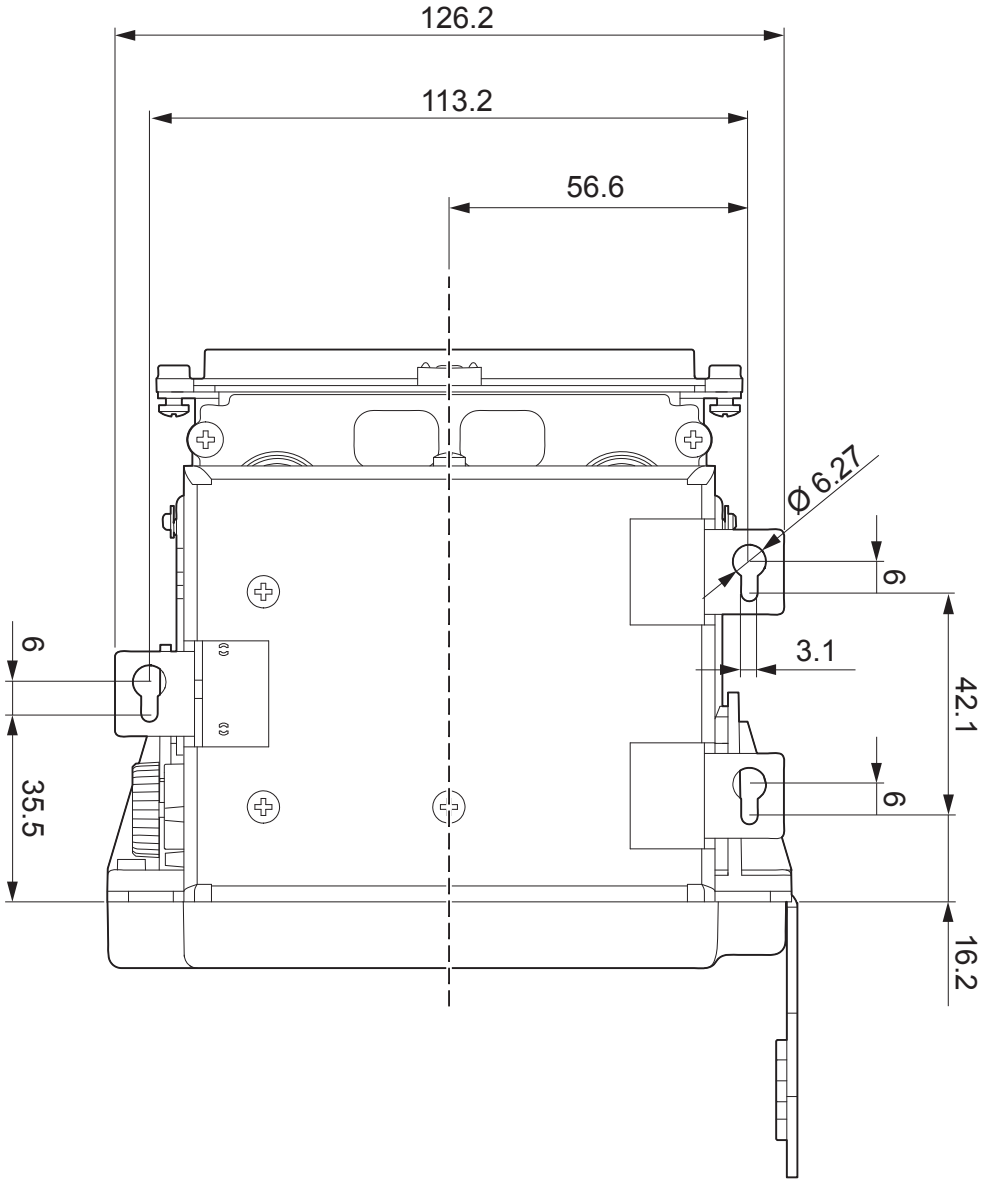

NOTE: All the dimensions shown in figure are in millimetres.

TG2480H STD

The device is provided with three fixing holes on the bottom of device (see following figure). To fasten the device on a panel, use three M3 screws.

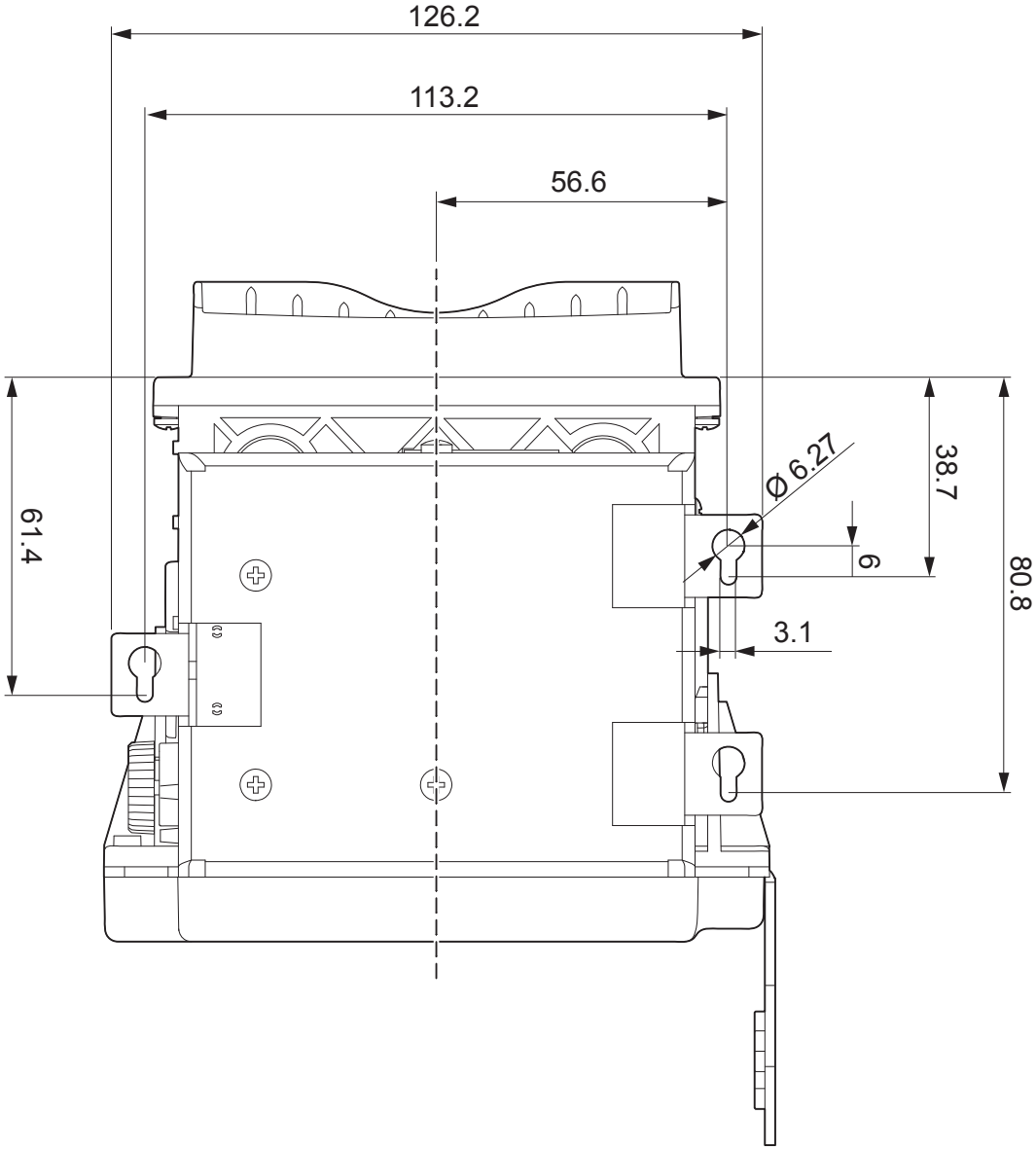

WARNING: In order to allow the anti-jamming system to operate properly, the printer must be mounted on a perfectly horizontal plan.

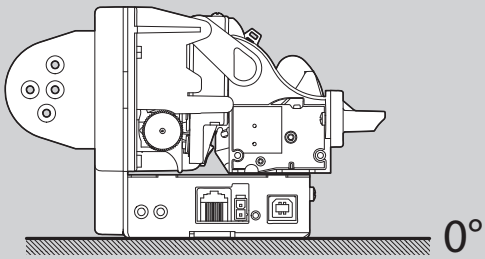

NOTE: All the dimensions shown in figure are in millimetres.

TG2480H TKOUT

The device is provided with three fixing holes on the bottom of device (see following figure). To fasten the device on a panel, use three M3 screws.

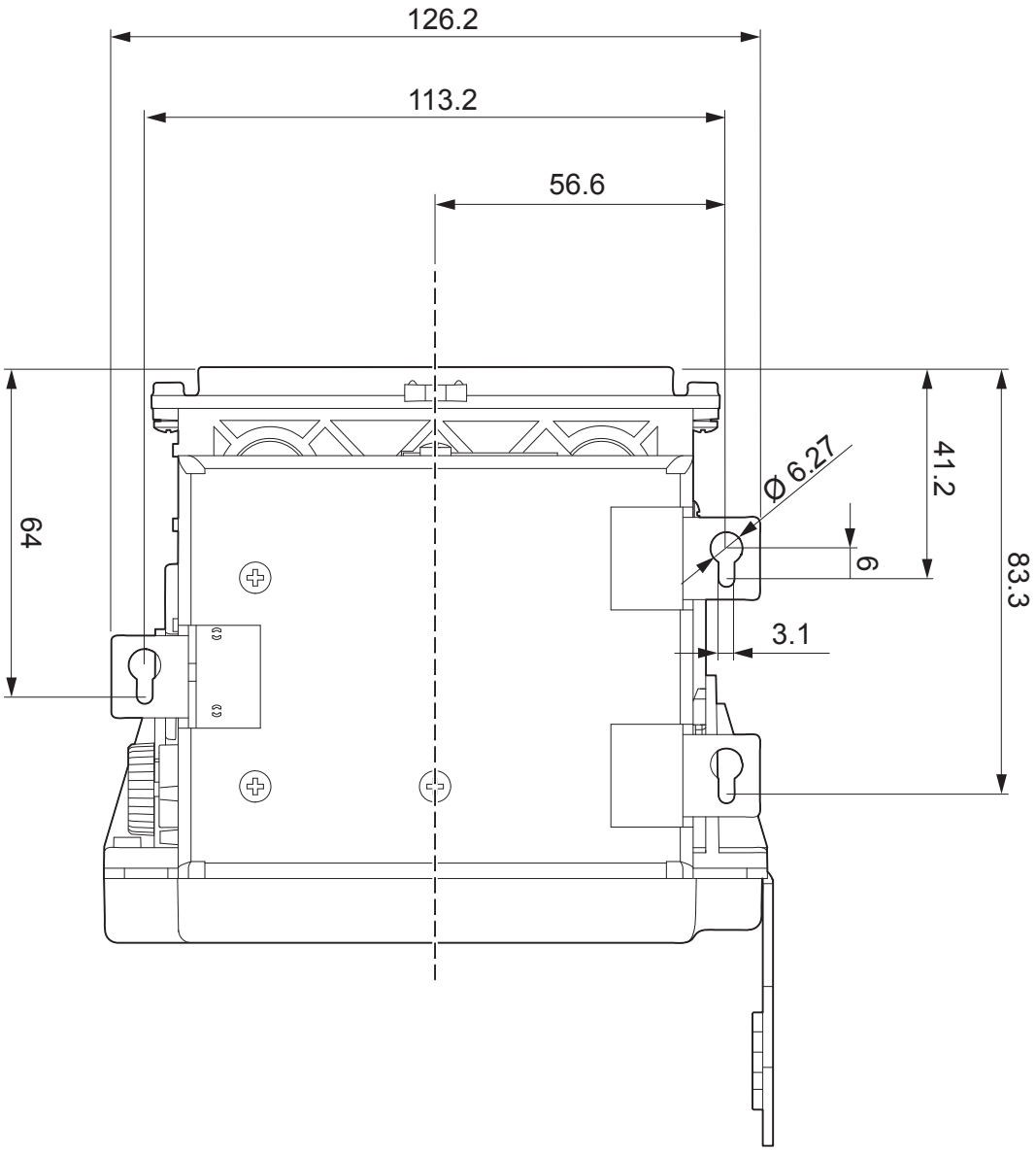

WARNING: In order to allow the anti-jamming system to operate properly, the printer must be mounted on a perfectly horizontal plan.

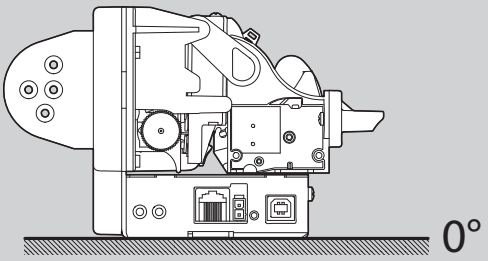

NOTE: All the dimensions shown in figure are in millimetres.

4.2 Paper roll holder assembly

The paper roll holder position is adjustable on four different positions: upper position P1, rotated upward P2, rear P3, rotated downward P4.
Fix the paper roll holder to the device holes shown in figure according to the desired position by using the two M4x6 fixing screws supplied.

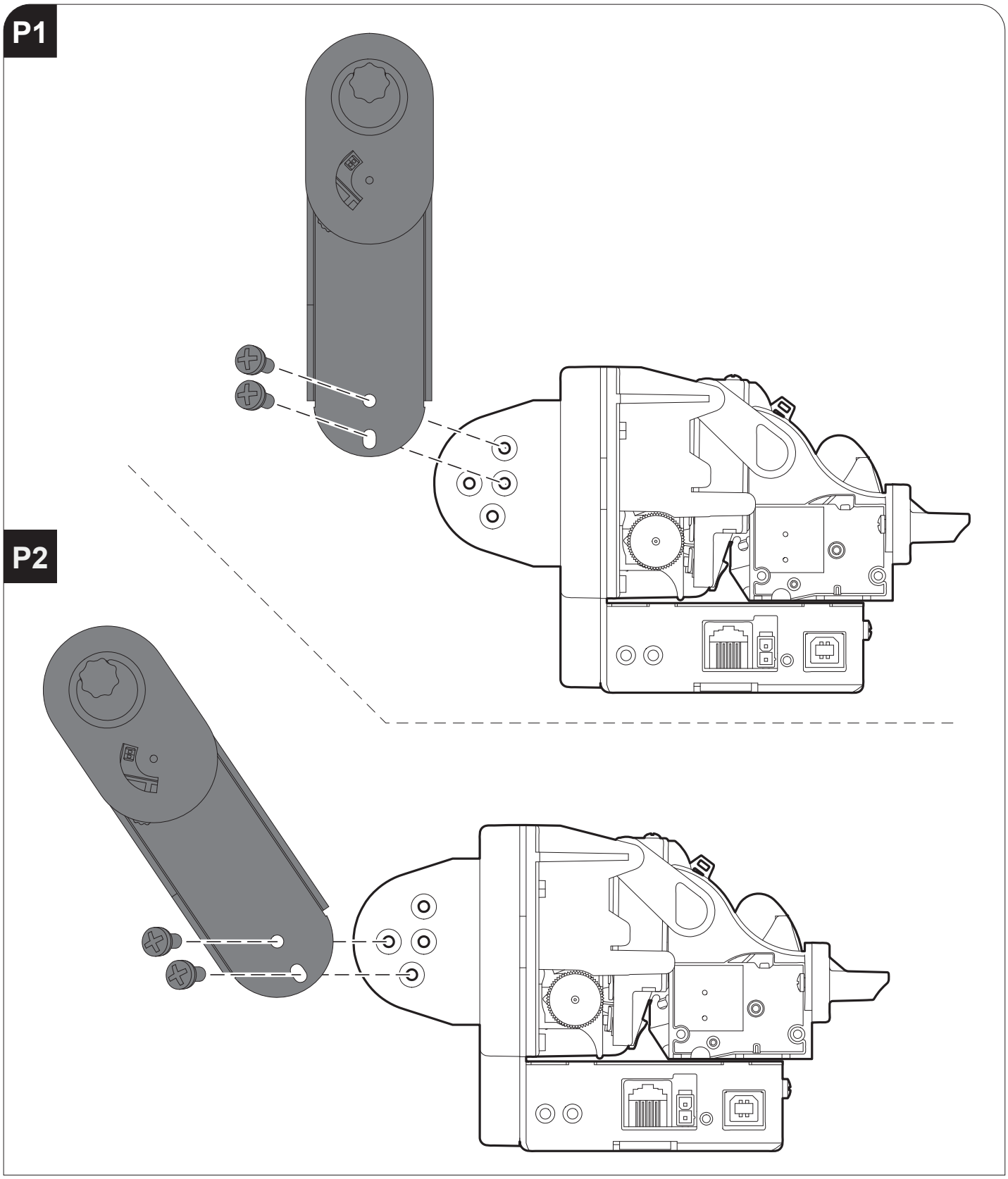

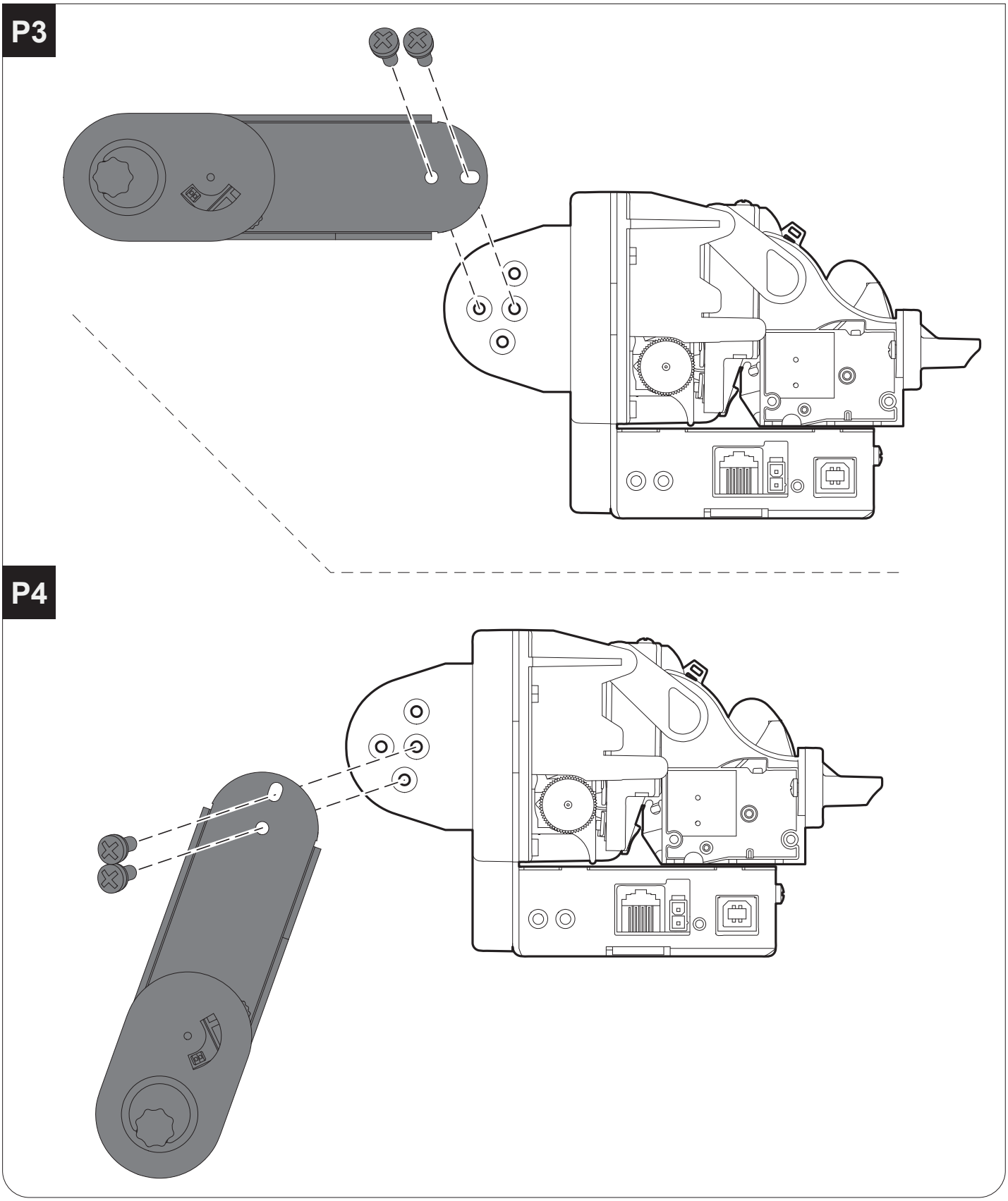

ATTENTION: While assembly the paper roll holder check the cable path (low paper sensor) is correct. Incorrect positions of the cable could cause damage on it.

4.3 Collections

The following figure shows the possible connections for the device.

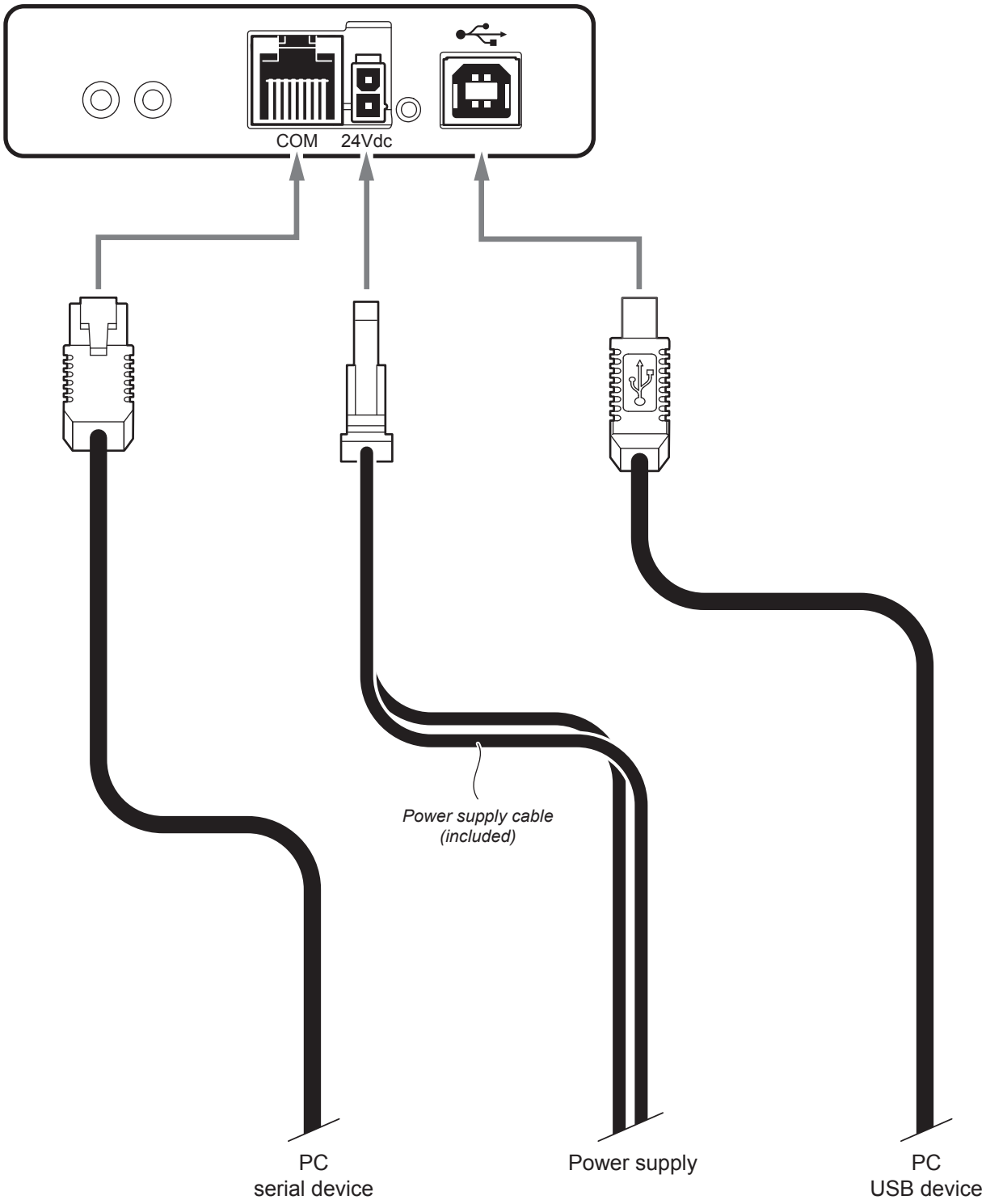

ATTENTION: In some using conditions, we recommend the installation of a ferrite core on the power supply cable.

NOTE: When the RS232 and USB communication cables are connected to the printer at the same time, communication takes place via the USB port.

4.4 Pinout

POWER SUPPLY

Male Molex connector series 5569 vertical (n° 39-30-1020)

J14	1	+24 Vdc
	2	GND

ATTENTION:
Respect power supply polarity.

NOTE: Power supply cable
The following figure shows the connector pinout of the power supply cable for the device:

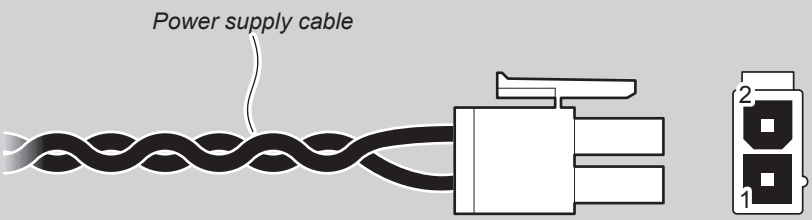

Female Molex connector series 5557 (n.39-01-3022)

PIN	*Cable color*	*Signal*
1	*Red*	*+24V*
2	*Black*	*GND*

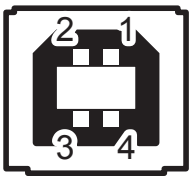

USB INTERFACE

Female USB type B connector

J1	1	USB-ON	(in)
	2	D0 -	(in/out)
	3	D0 +	(in/out)
	4	GND	
	SH1	SHIELD	
	SH2	SHIELD	

SERIAL INTERFACE

Female RJ45 connector

J15	1	n.c.		
	2	GND		
	3	TX	(out)	During transmission, takes the value -VRS232 and +VRS232, depending on data
	4	RX	(in)	During reception, takes the value -VRS232 and +VRS232, depending on data
	5	RTS	(out)	When +VRS232, printer is ready to receive data
	6	n.c.		
	7	n.c.		
	8	n.c.		

NOTES

DEVICE > PC connection

The following picture shows an example of connection between the device and a personal computer using an 8 pin serial RJ45 male connector and a 9 pin female connector.

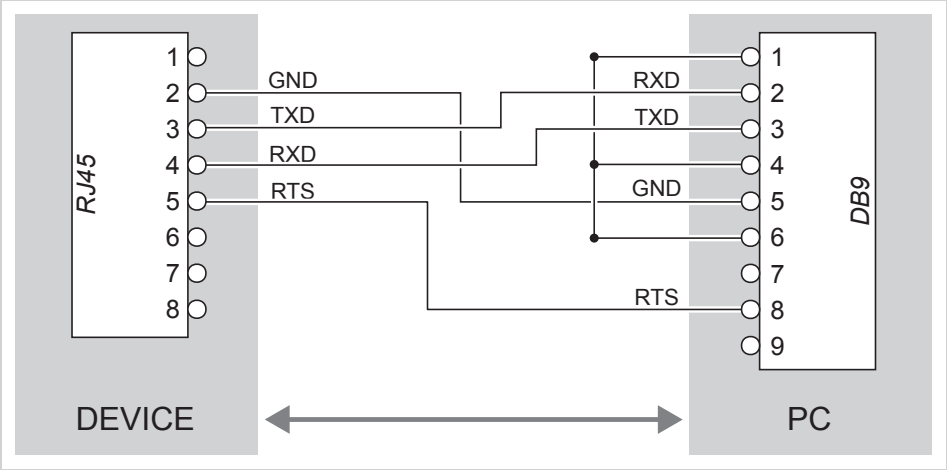

When use a serial cable, we recommend the installation of a ferrite core on the power supply cable.

Given the presence of the RS232 standard, logic value “0” corresponds to the voltage value +VRS232 (voltage value between +3Vdc and +15Vdc) and logic value “1” corresponds to the voltage value -VRS232 (voltage value between -3Vdc and -15Vdc.

4.5 Driver and SDK

The drivers are available for the following operating system:

OPERATING SYSTEM	DESCRIPTION	INSTALLATION PROCEDURE
Windows	Driver for Windows XP	From the START menu, press Run and type-in the path where the SW was saved on your PC, then click OK. Follow the instructions that appear on the screen to install the driver.
	Driver for Windows VISTA (32/64bit)	
	Driver for Windows 7 (32/64bit)	
	Driver for Windows 8 (32/64bit)	
	Driver for Windows 8.1 (32/64bit)	
	Driver for Windows 10 (32/64bit)	
	Opos	
Linux		Follow the instruction get back on the README.TXT file. You can find it in the software package downloaded in advance.
Android	Library for CustomAndroidAPI	Extract the zipped folder to the destination path desired. Follow the instructions present in the software package that you downloaded on how to install and use the library.
iOS	SDK for CustomiOSApi	Extract the zipped folder to the destination path desired. Follow the instructions present in the software package that you downloaded on how to install and use the SDK

NOTE:
All drivers can be found in the DOWNLOAD section of the web site www.custom.biz.

5 OPERATION

5.1 Device opening

1

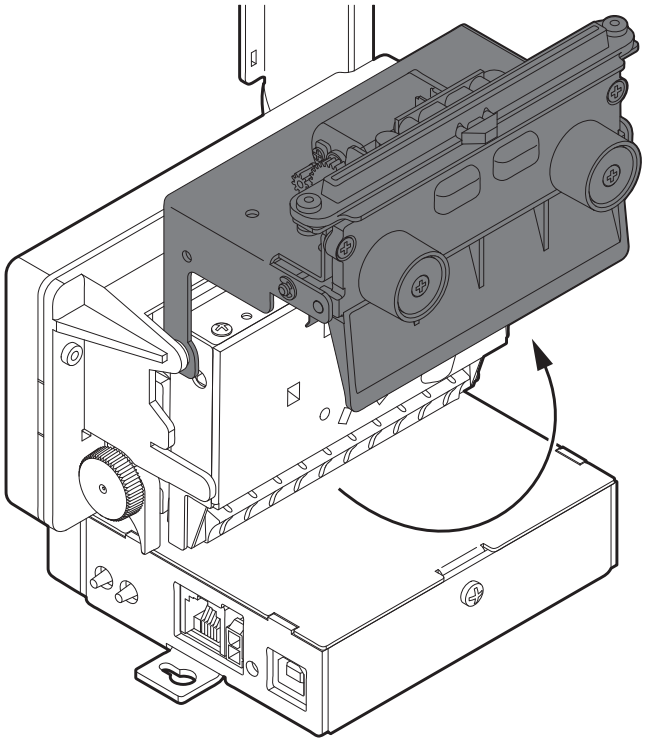

Lift the ejector group by unhooking the magnets on the bottom side
and by rotating the group upwards.

2

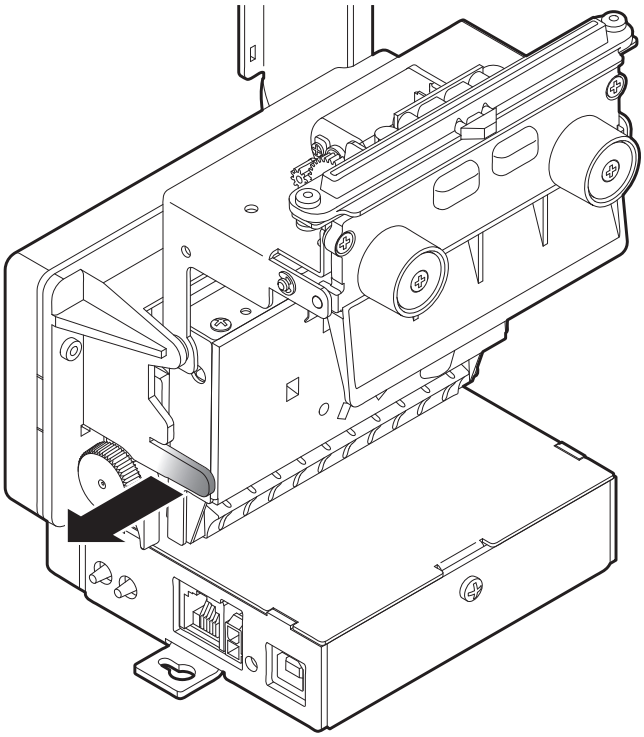

Widen the unlocking hook for the cutter group.

3

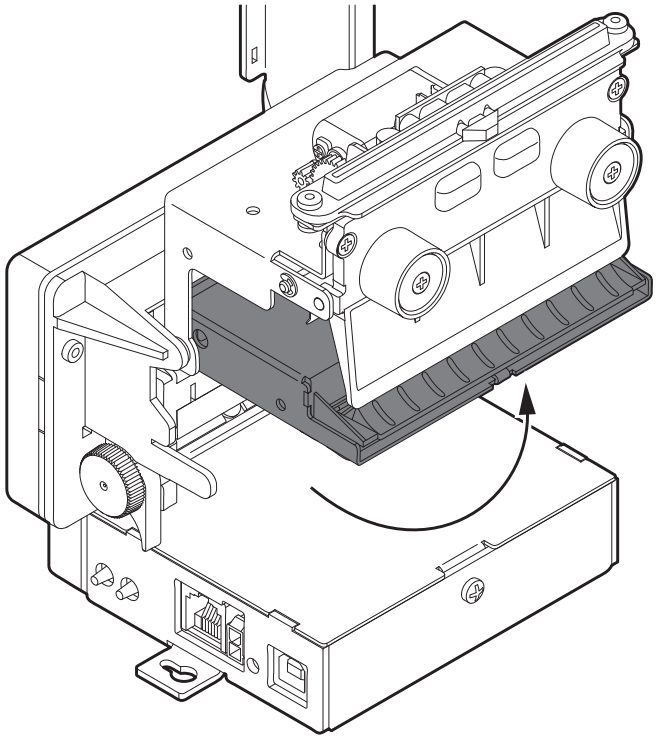

Rotate upwards the cutter group to lift it.

5.2 Device closing

1

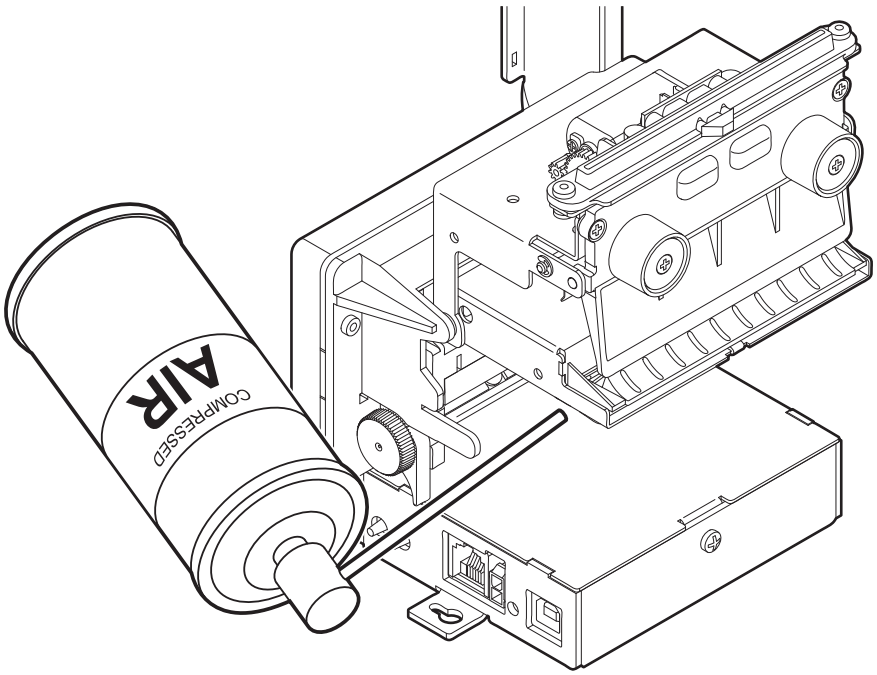

Check the presence of paper scraps
and remove them (see par.5.3).

2

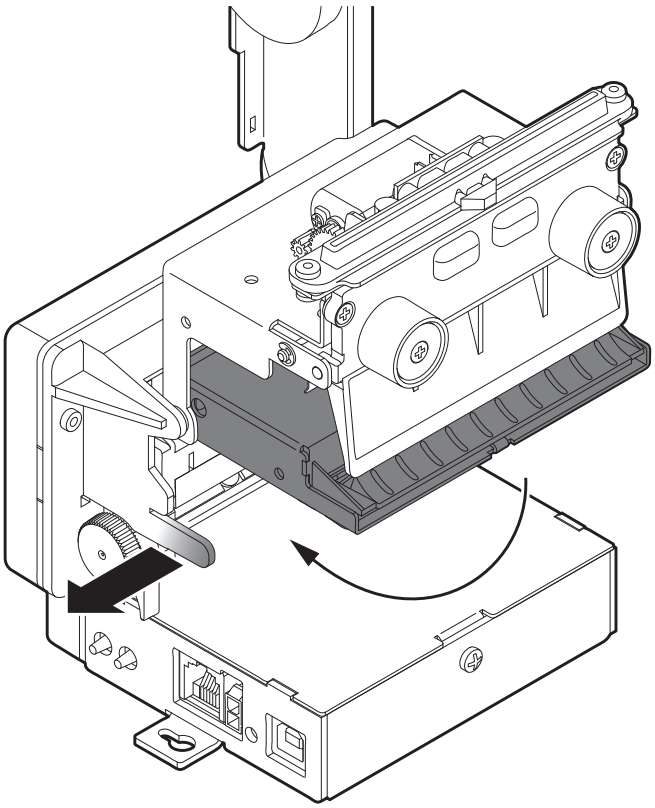

Widen the unlocking hook
and close the cutter group.

3

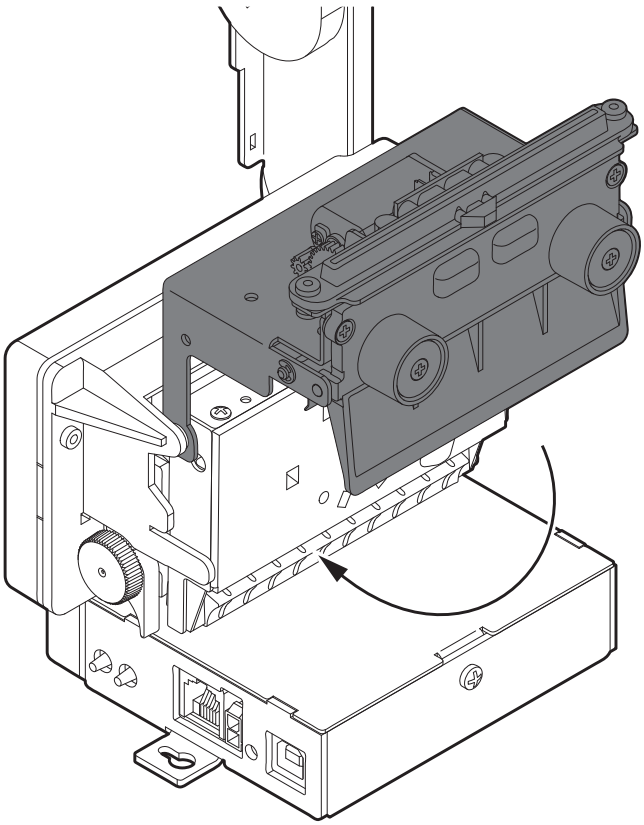

Lower the ejector group and hook
the two magnets to the device chassis.

5.3 Adjusting paper width

The device allows the use of paper roll width from 52mm to 80mm. To adjust the width of the paper roll case, rotate the knob as shown in the following figure.

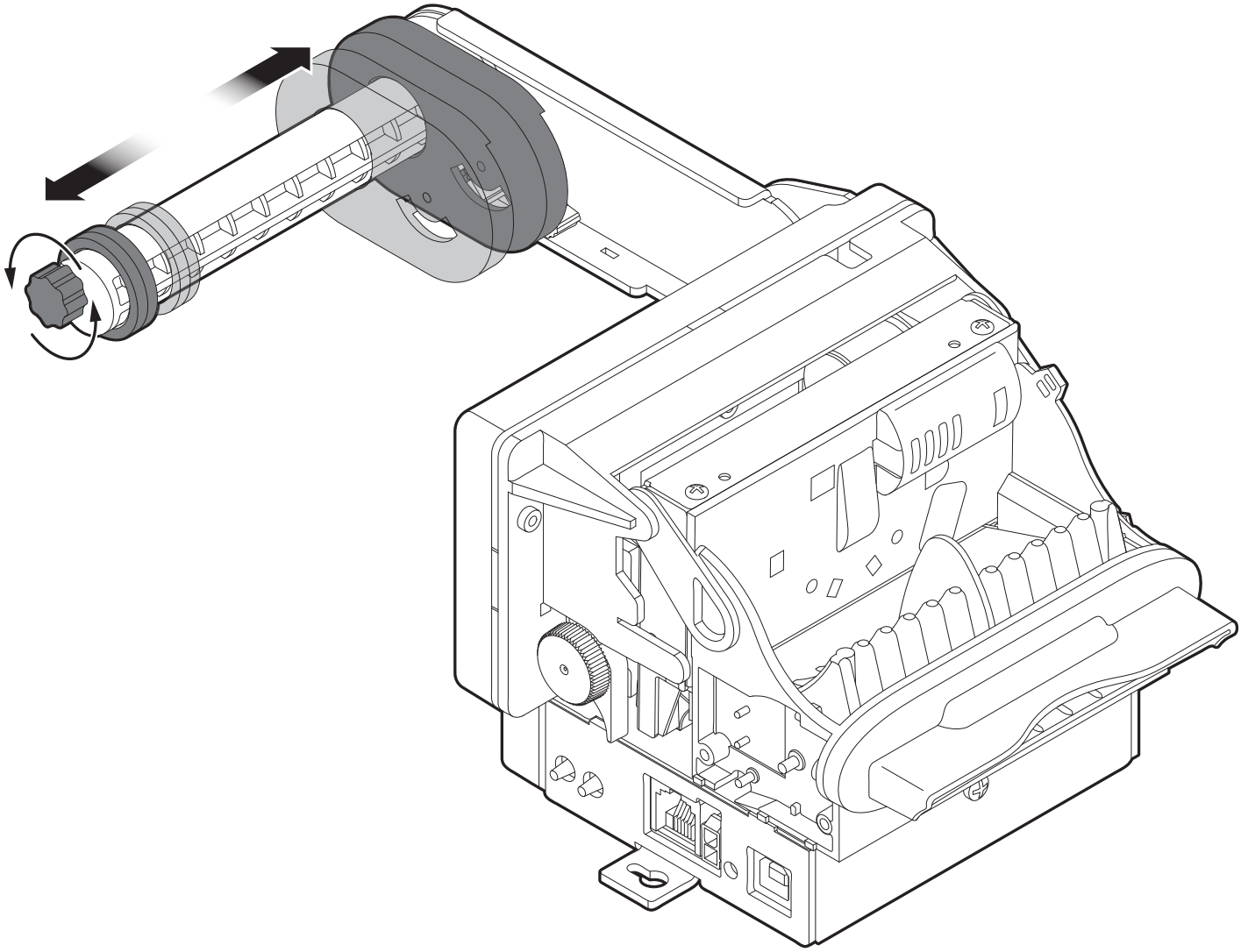

NOTE:
Properly set the value of the “Paper Width” parameter during the Setup procedure (see chapter 6).

5.4 Adjusting paper stock

The device allows the move the position of the low paper sensor to adjust the amount of paper on the roll under which report the low paper.
Use the lever shown in figure to move the low paper sensor: move the lever up to increase the paper stock, move the lever down to decrease the paper stock.

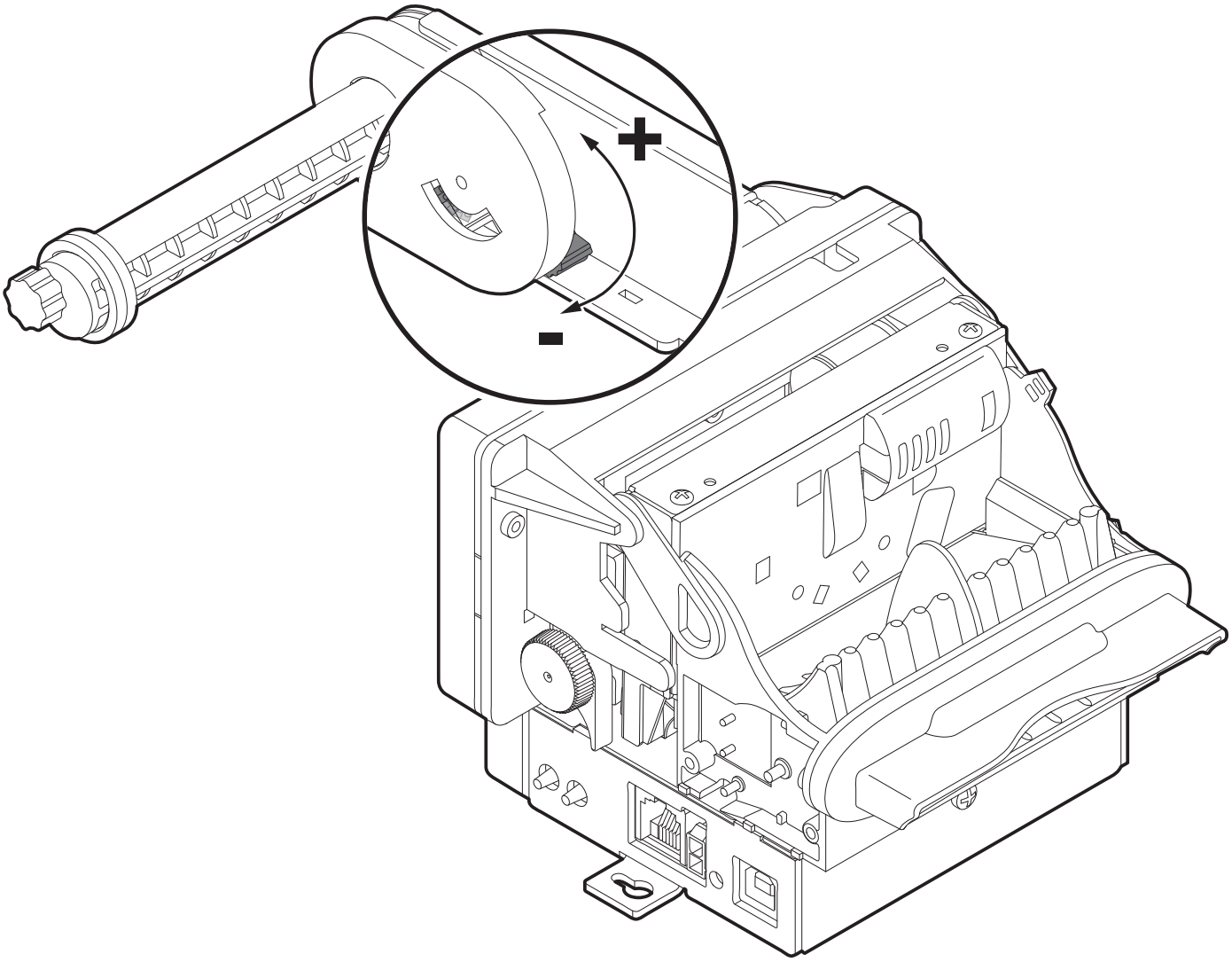

5.5 Switch the device ON

1

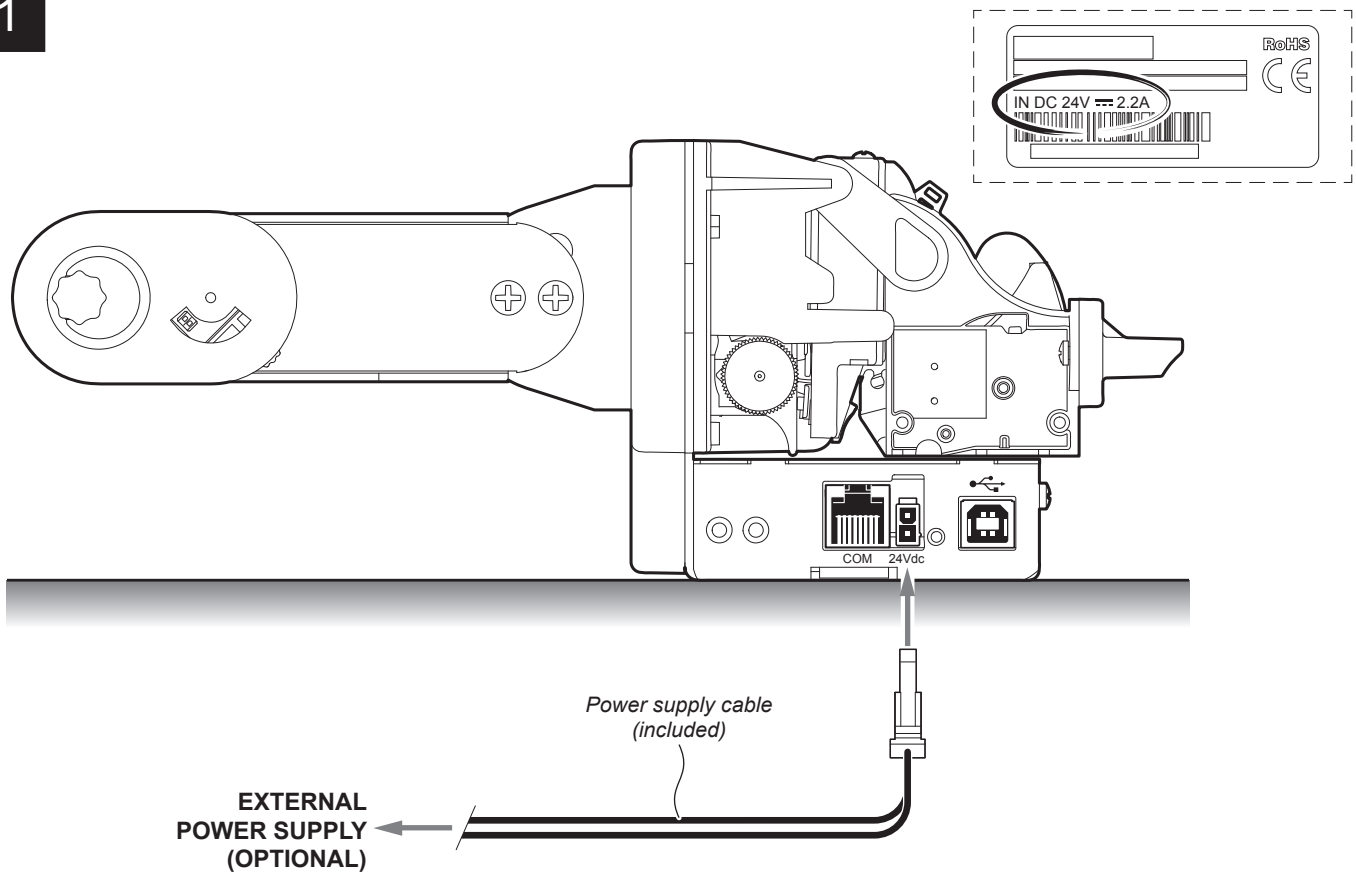

Connect the power supply cable to an external power supply unit and to the device.
Use the type of electrical power supply indicated on the label.

2

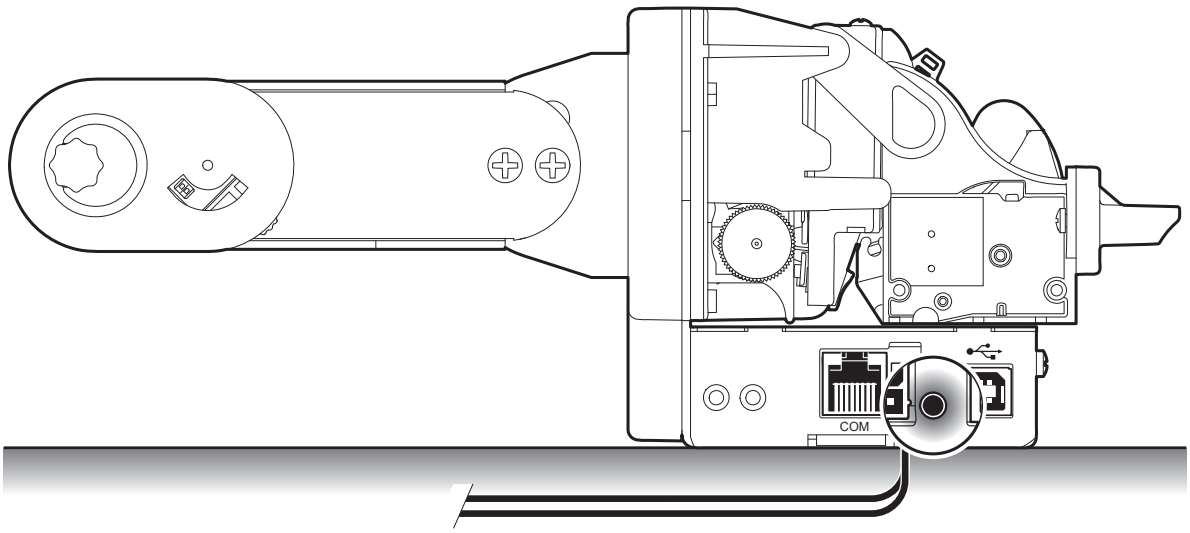

The green status LED turn on
and the device is ready.

5.6 Loading the paper roll

To load the paper proceed as follows.

1

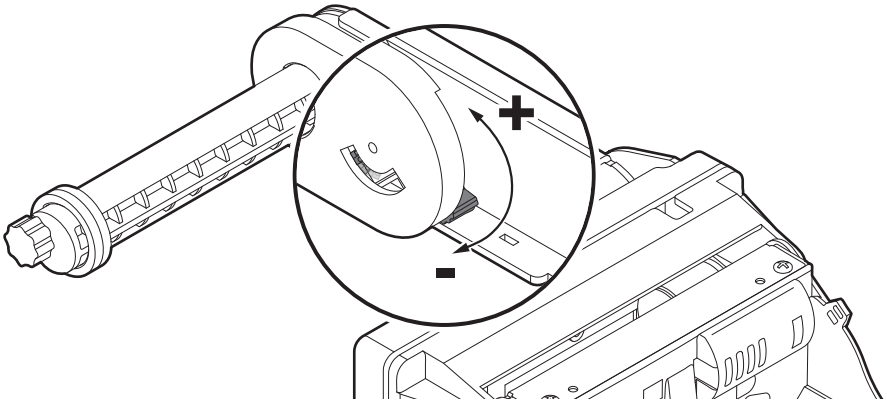

Adjust the paper stock
(see previous paragraphs).

2

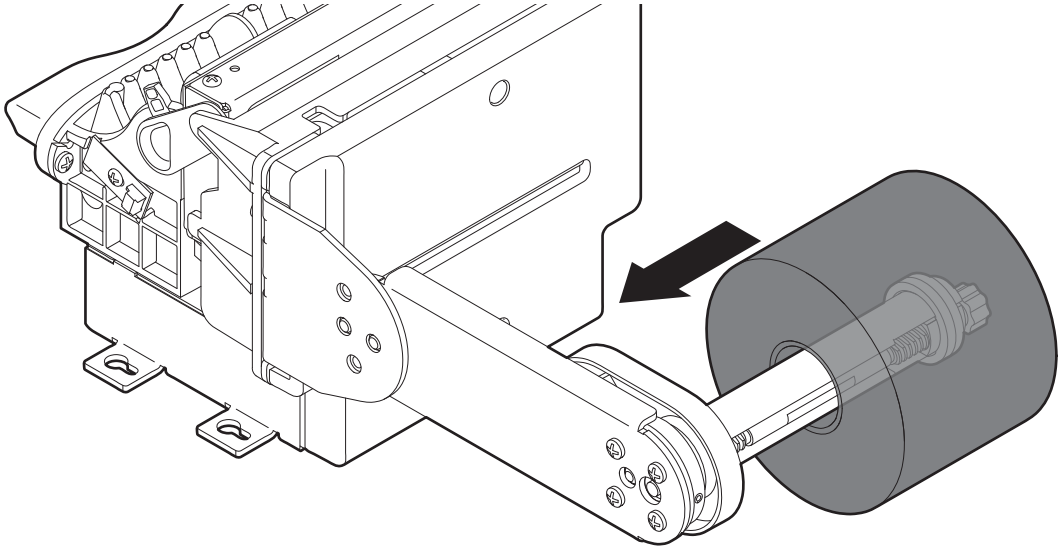

Inser the paper roll on the pin
of the roll holder.

3

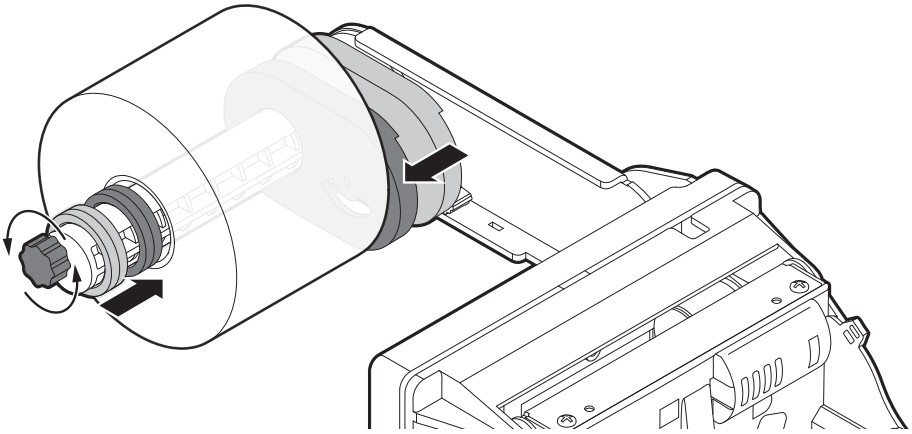

Adjust the paper width
(see previous paragraphs).

4

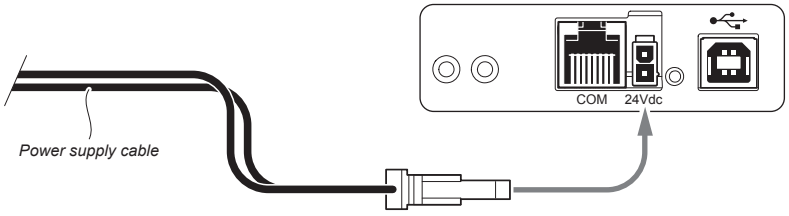

Switch ON the device
(see previous paragraphs).

5

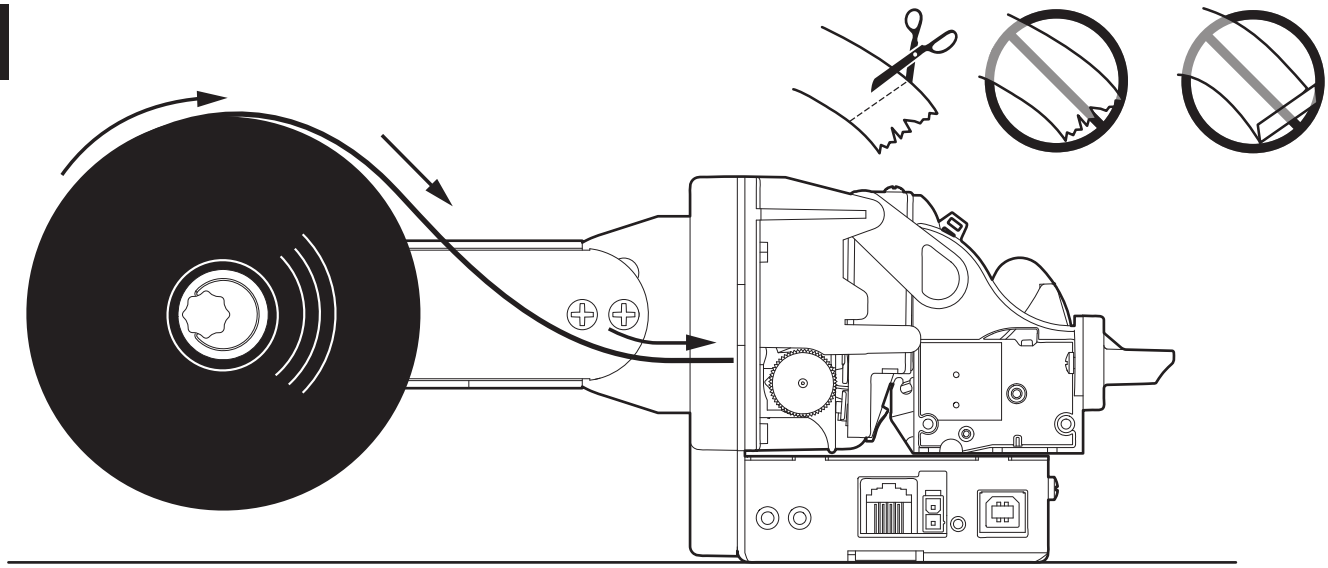

Insert the paper into the the input mouth
so that it unrolls correctly, as shown in figure.

6

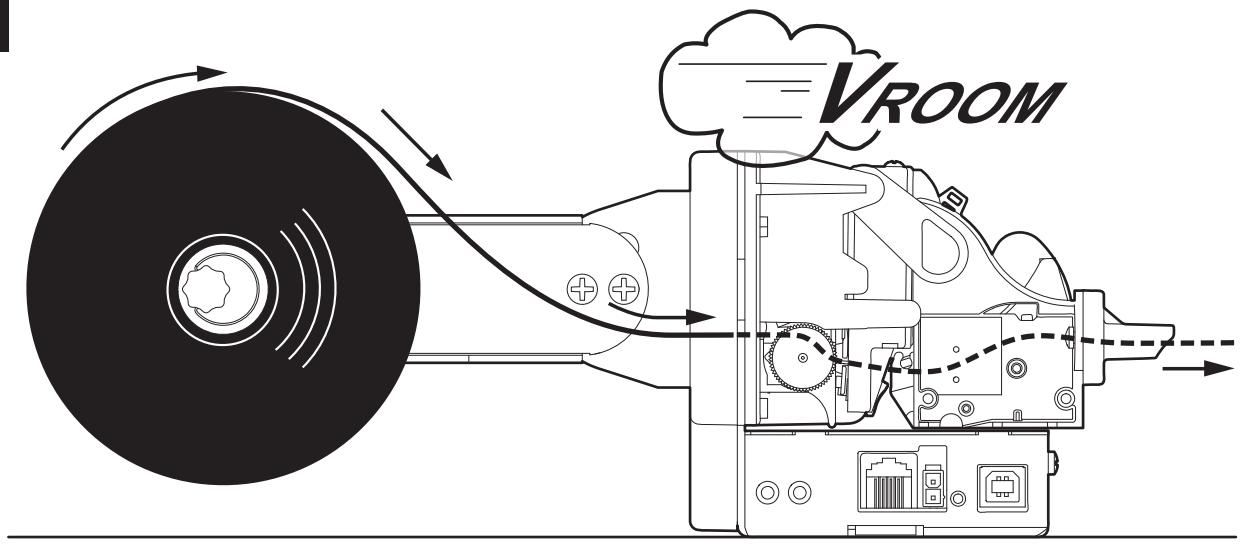

Wait until the paper is
automatically loaded.

NOTE: At every change of paper roll, check inside the device and remove any scraps of paper and accumulated dust (see paragraph 7.2).

5.7 Anti-jamming system

TG2480H STD, TG2480H TKOUT

The withdrawal of the ticket before the end of printing, may damage the printing mechanism or the paper ripping resulting in probable jam.

The device is equipped with an anti-jamming system that starts operating when the user tries to pick up the ticket while printing is still in progress.
This system is composed of an oscillating plane placed under the inspection door and of a fork sensor that detects the movements of the oscillating plane.

The user that make a ticket withdrawal before the printing end, causes the tension of the paper resulting in the lowering of the oscillating plane. This movement engages the fork sensor: printing is interrupted and the ticket is cut instantly.

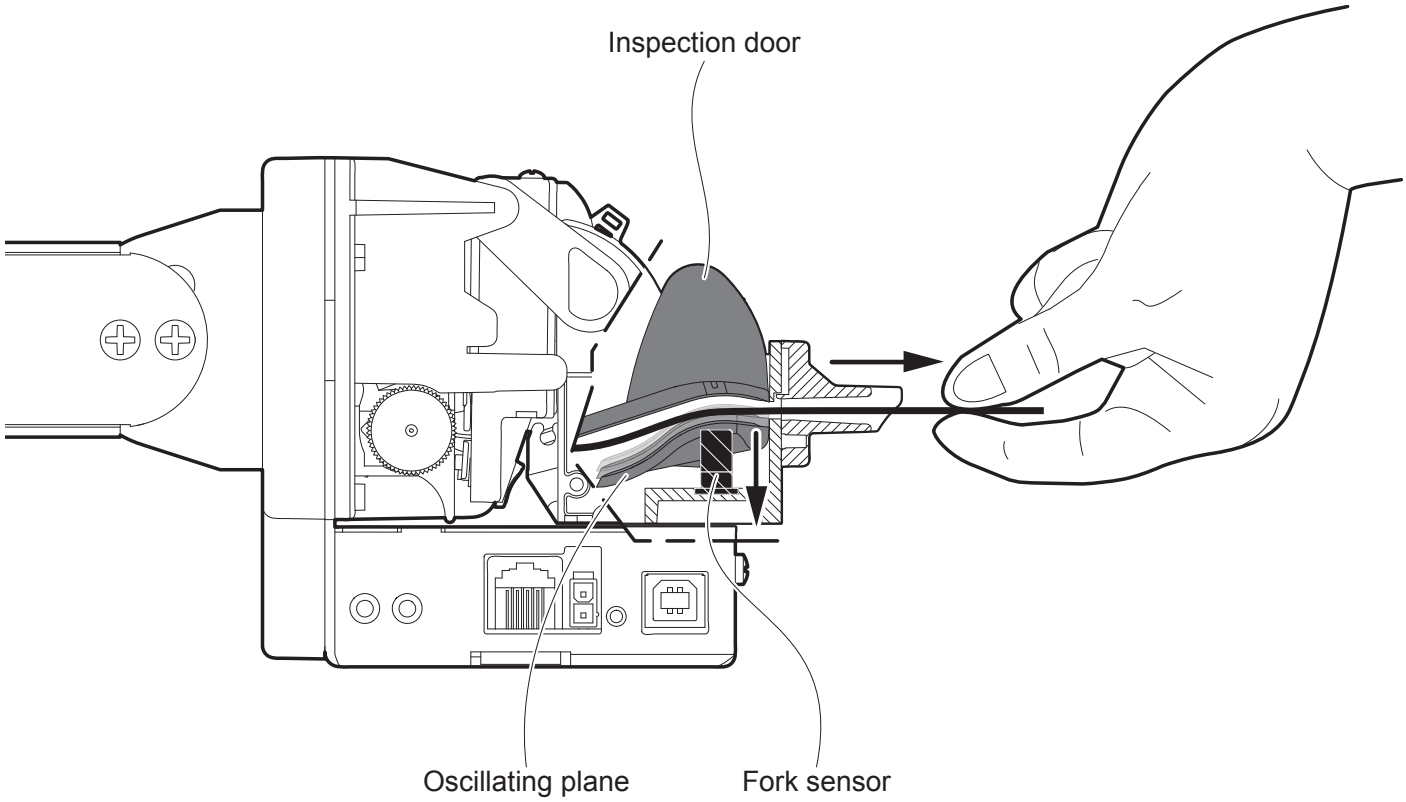

5.8 Issuing ticket

The device allows you to choose between different operating modes for the issuance of printed tickets.
The operating modes shown in the following images, depend on the settings of the configuration parameters and commands sent to the device.

“EJECT” mode (TG2480H STD, TG2480H TKOUT)

1

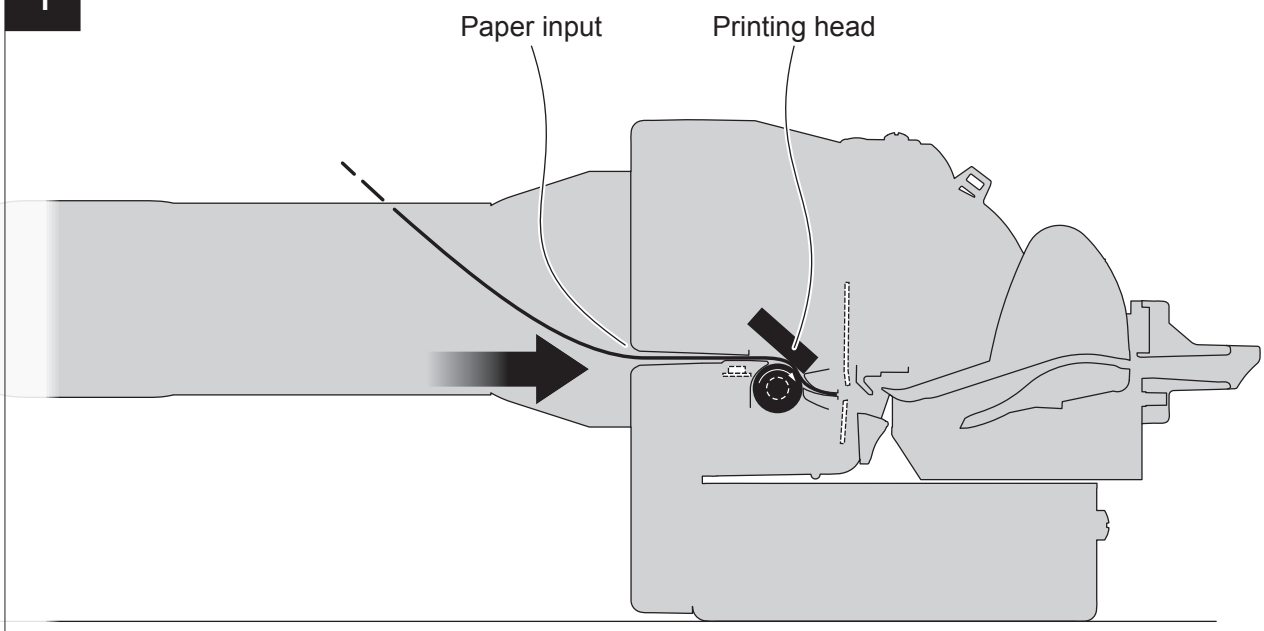

The device starts the ticket printing.

2

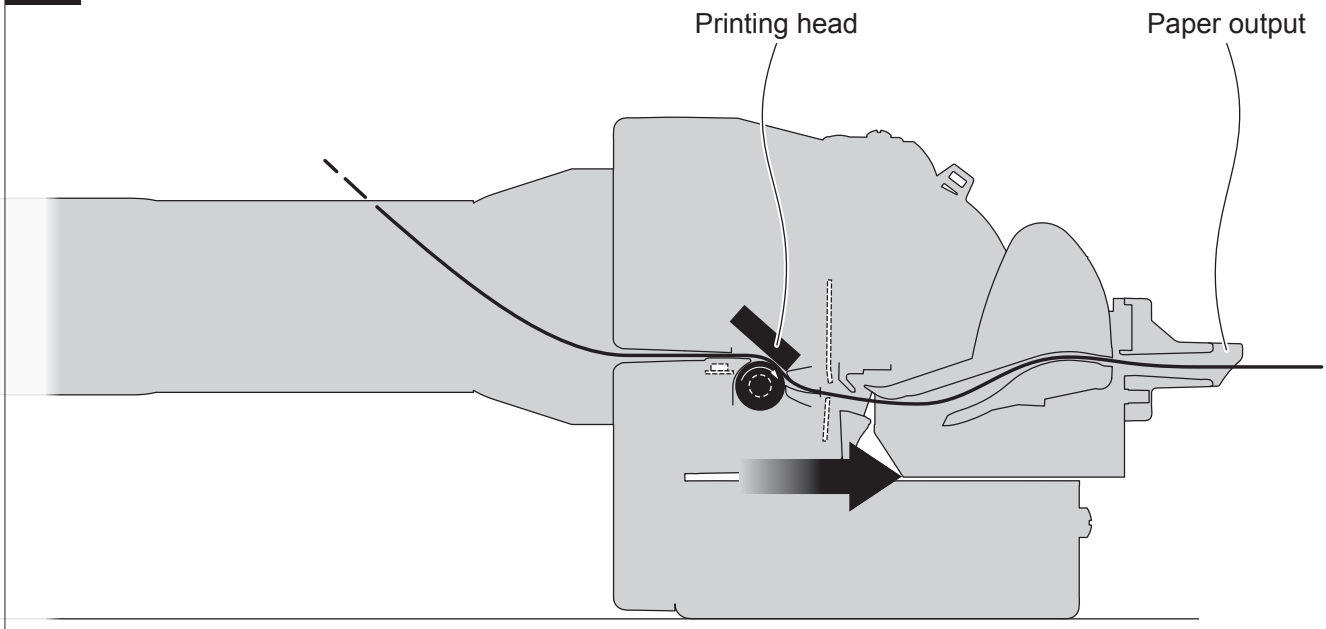

The device continues the ticket printing while
the portion already printed starts to get out of the cutter.

3

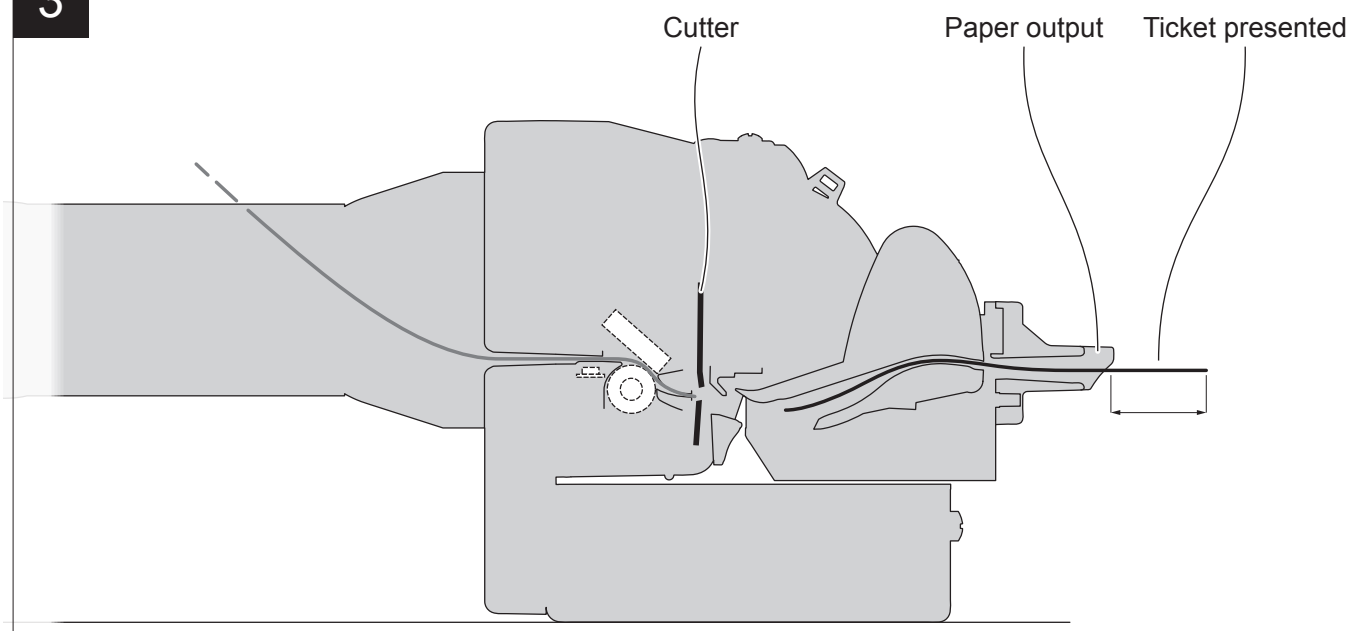

When printing ends, the device cuts the ticket printed
and presents a portion of it on the paper mouth

4

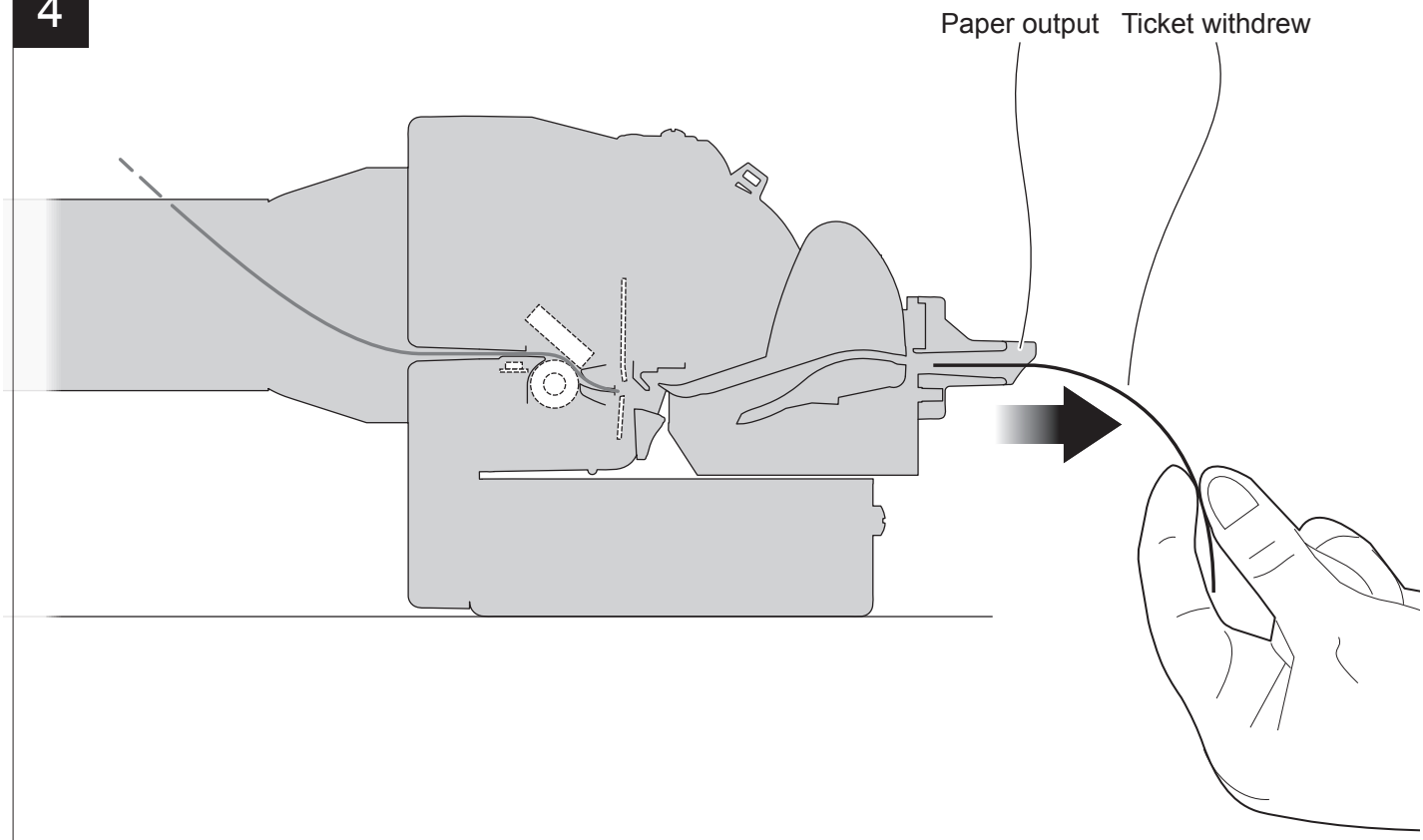

The user withdraw the ticket from the paper mouth.

“EJECT” mode (TG2480H EJC)

1

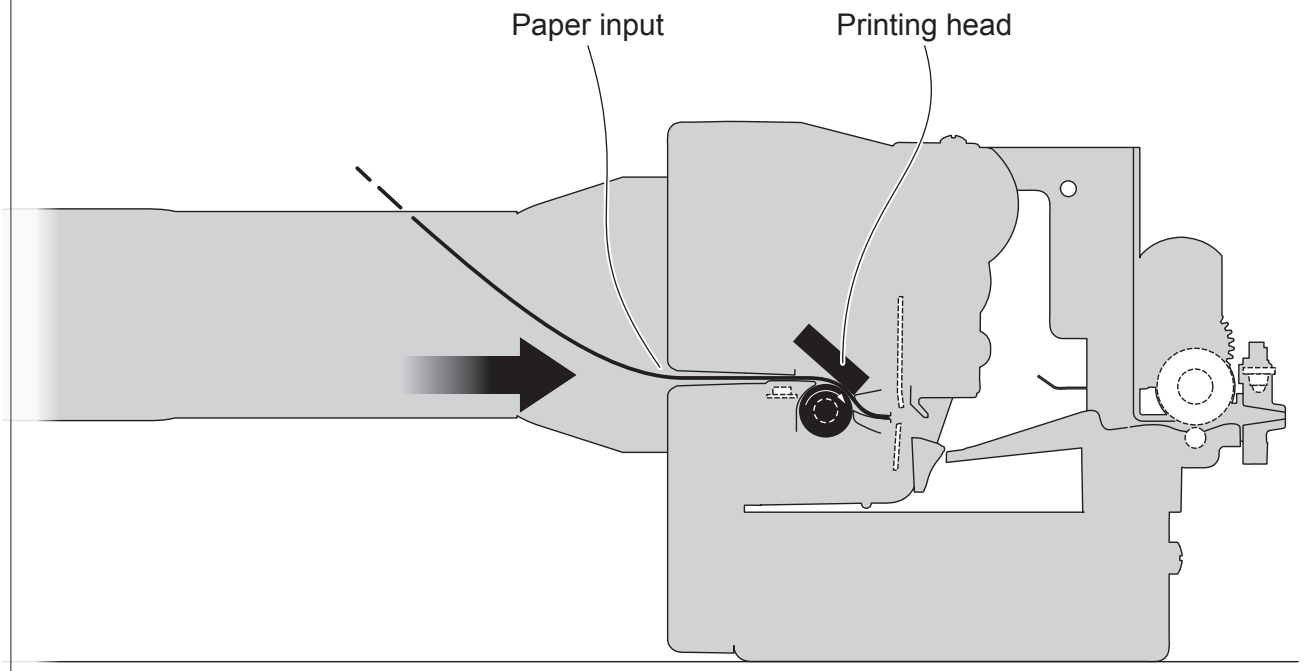

The device starts the ticket printing.

2

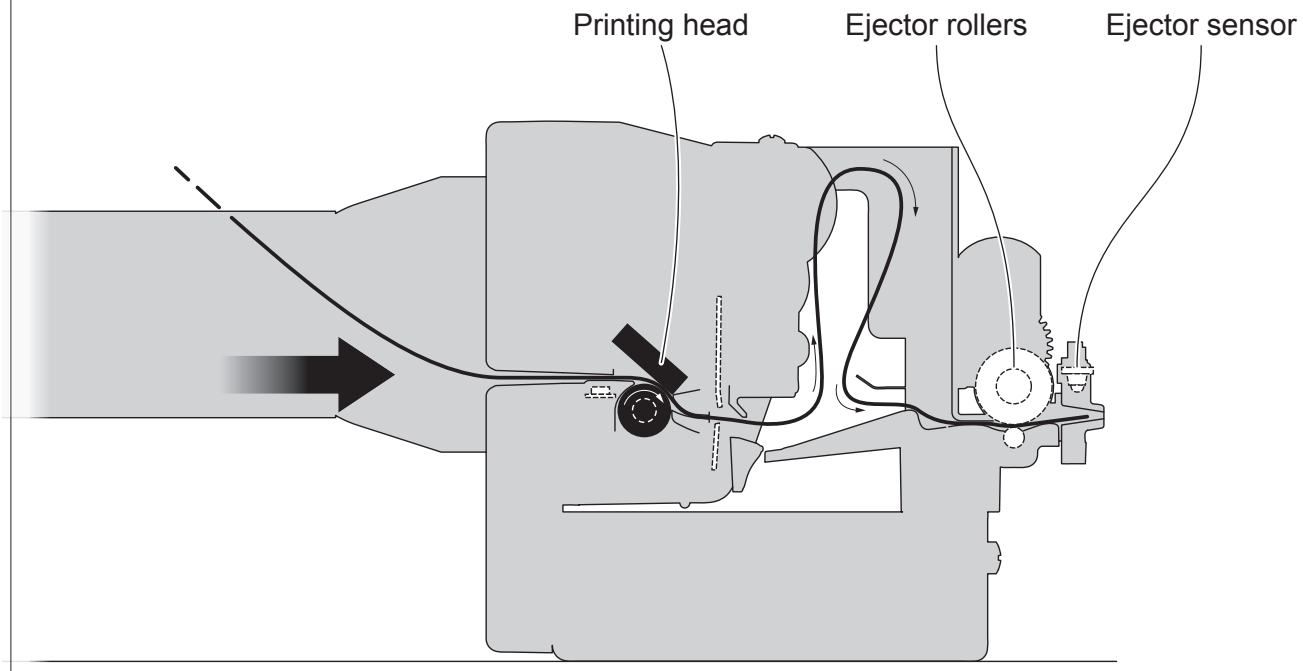

The ticket advances ahead to engage the ejector sensor and is caught between the ejector rollers. The printed portion of ticket is collected in the space between cutter and ejector while the device continues printing.

3

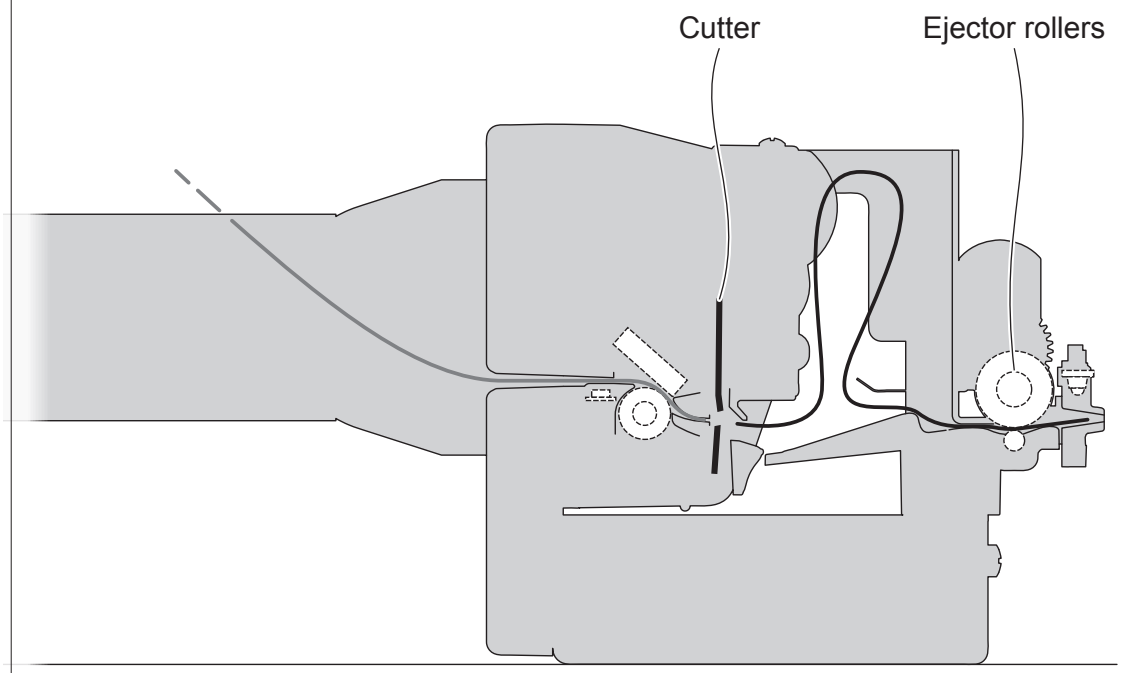

When printing ends, the device cuts the ticket printed.

4

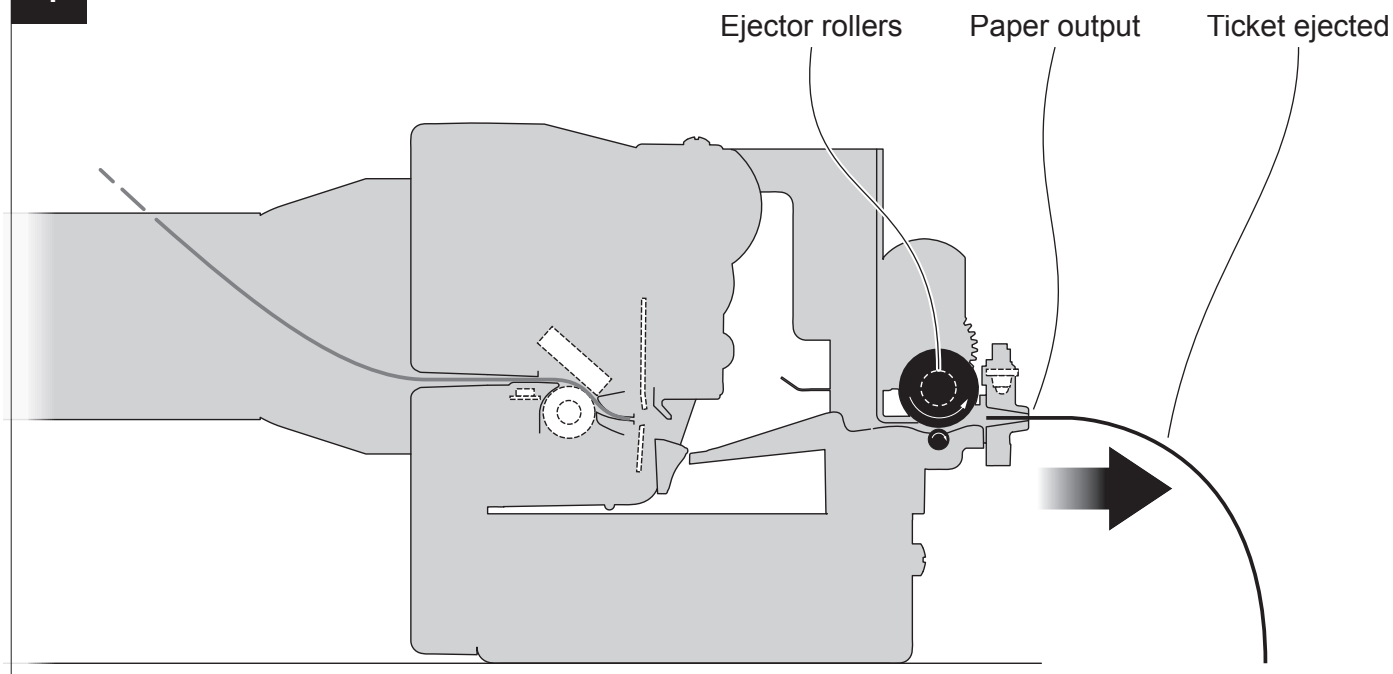

The device directly ejects the ticket

“PRESENT-EJECT” mode (TG2480H EJC)

1

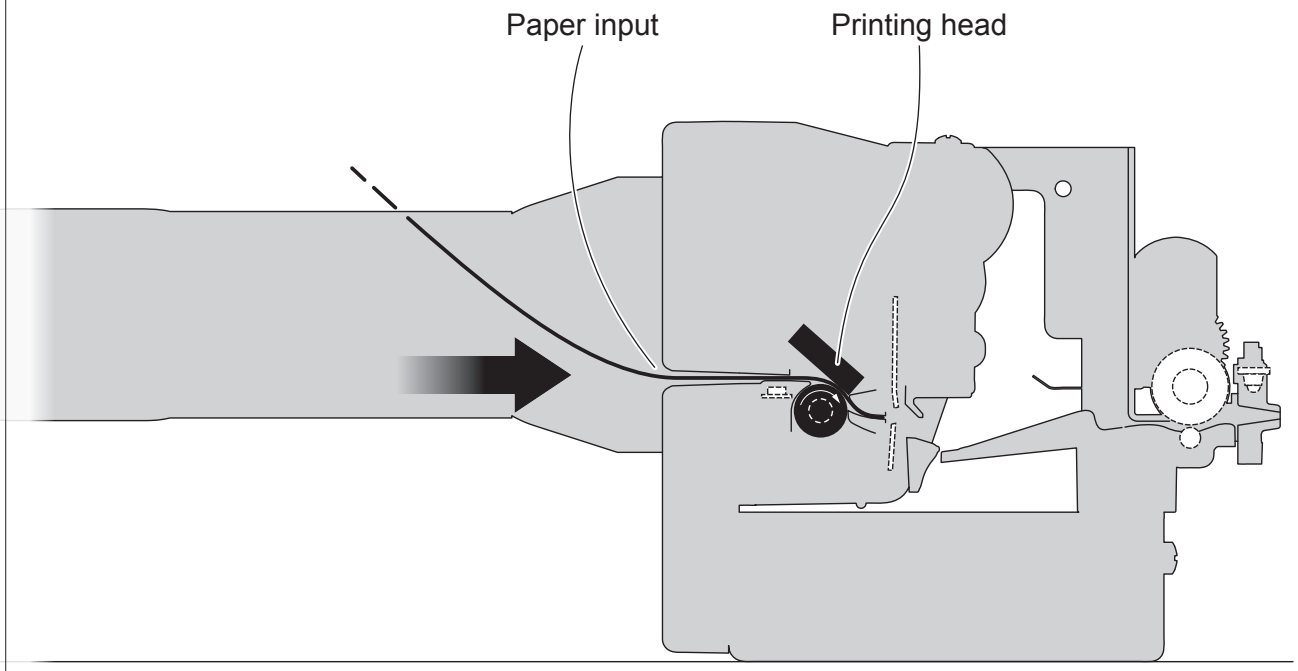

The device starts the ticket printing.

2

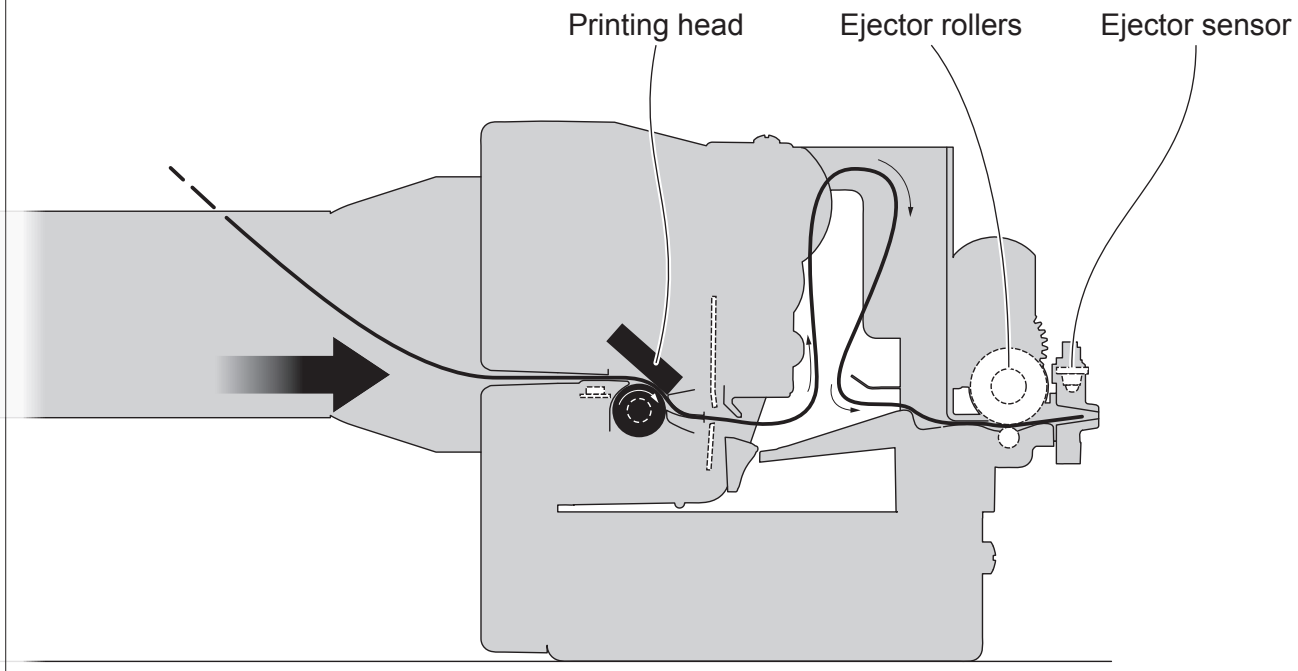

The ticket advances ahead to engage the ejector sensor and is caught between the ejector rollers. The printed portion of ticket is collected in the space between cutter and ejector while the device continues printing.

3

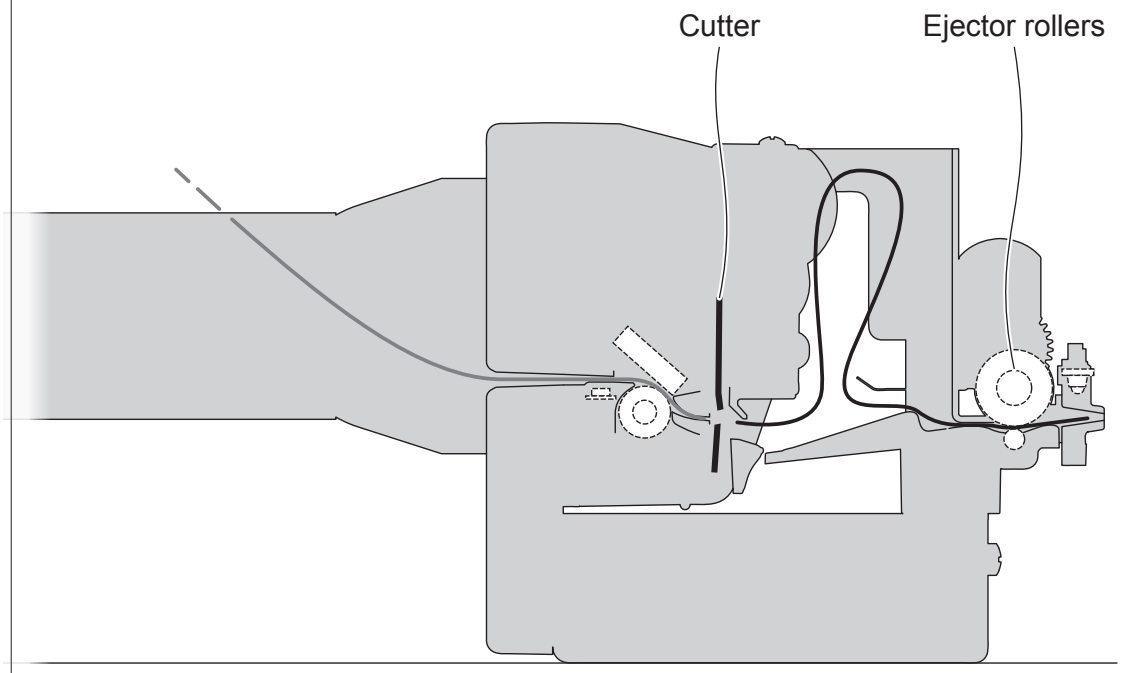

When printing ends, the device cuts the ticket printed.

4

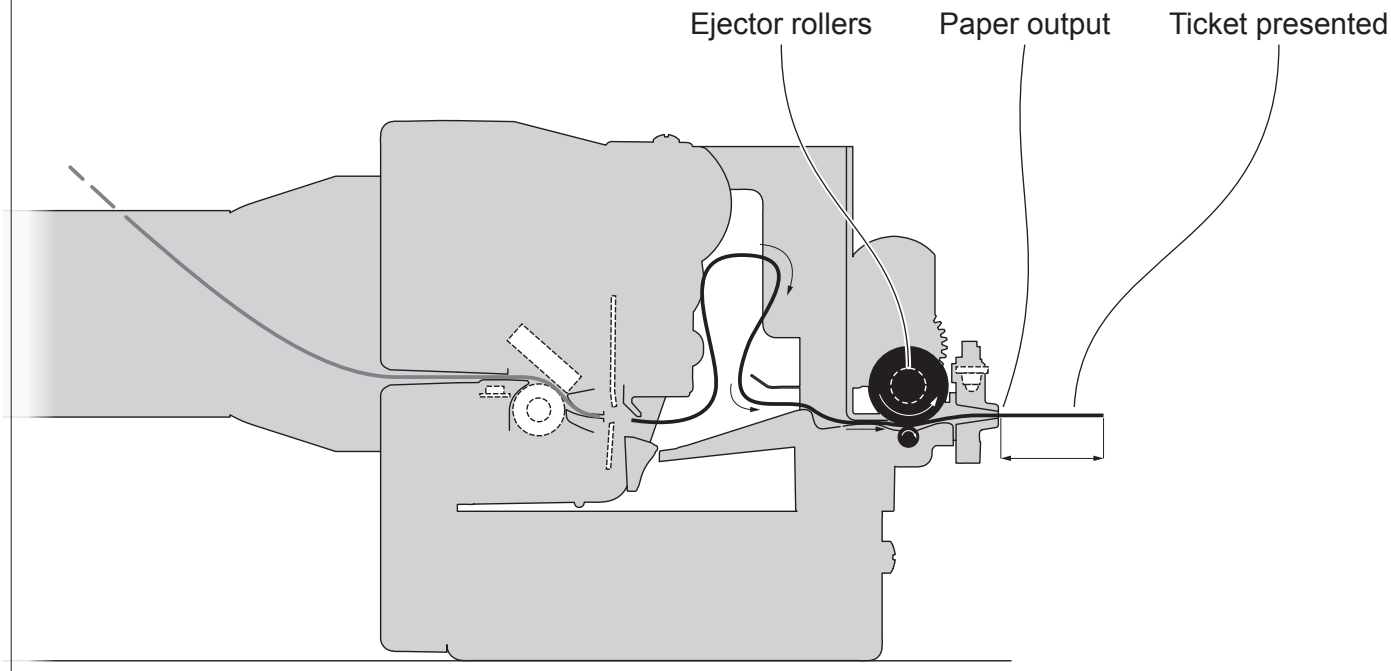

The device presents a portion of the ticket printed on the paper mouth.

5

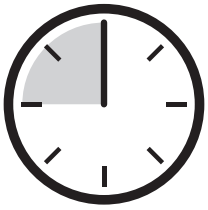

The ticket is waiting on the paper mouth for a preset period of time

6

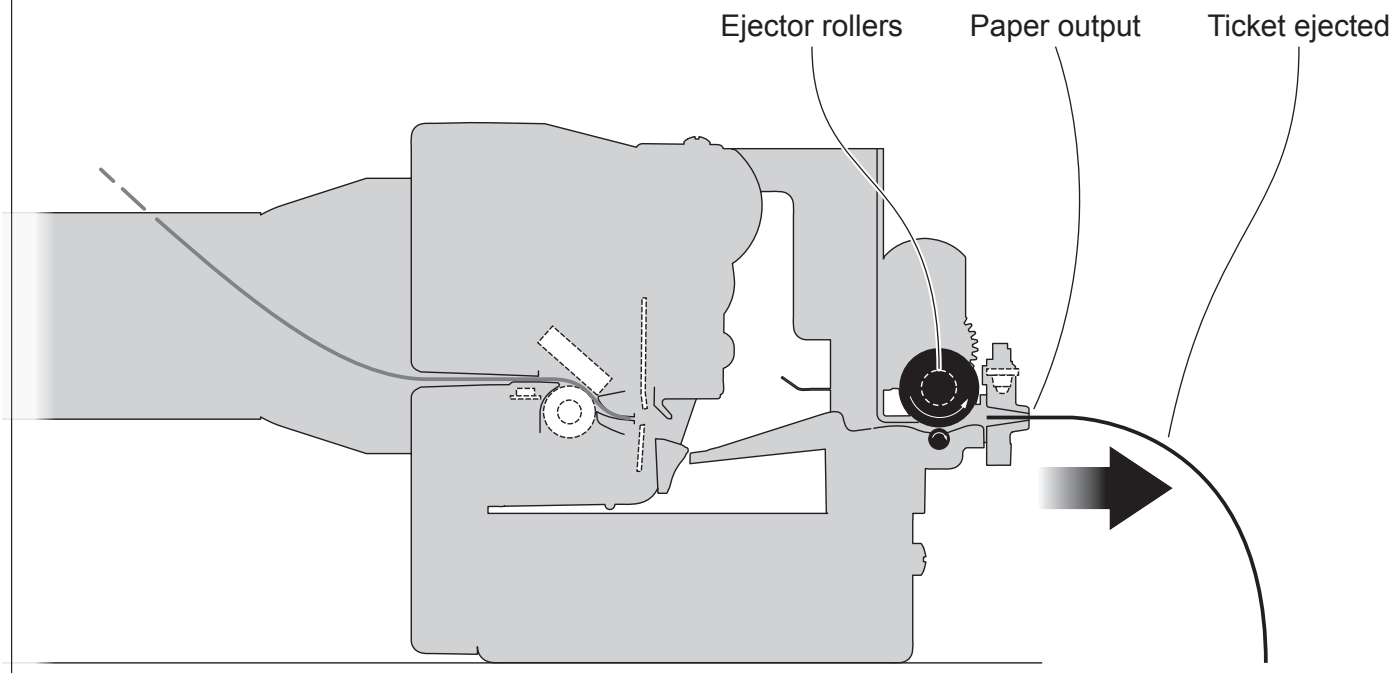

The device directly ejects the ticket

“PRESENT” mode (TG2480H EJC)

1

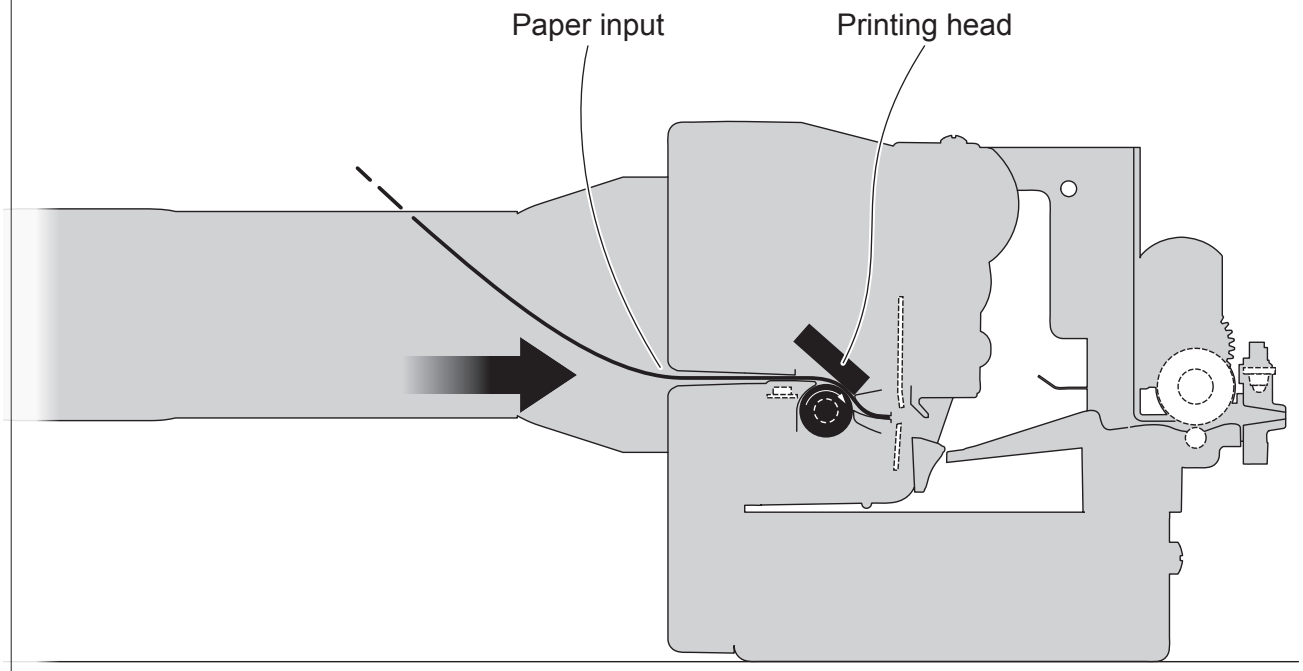

The device starts the ticket printing.

2

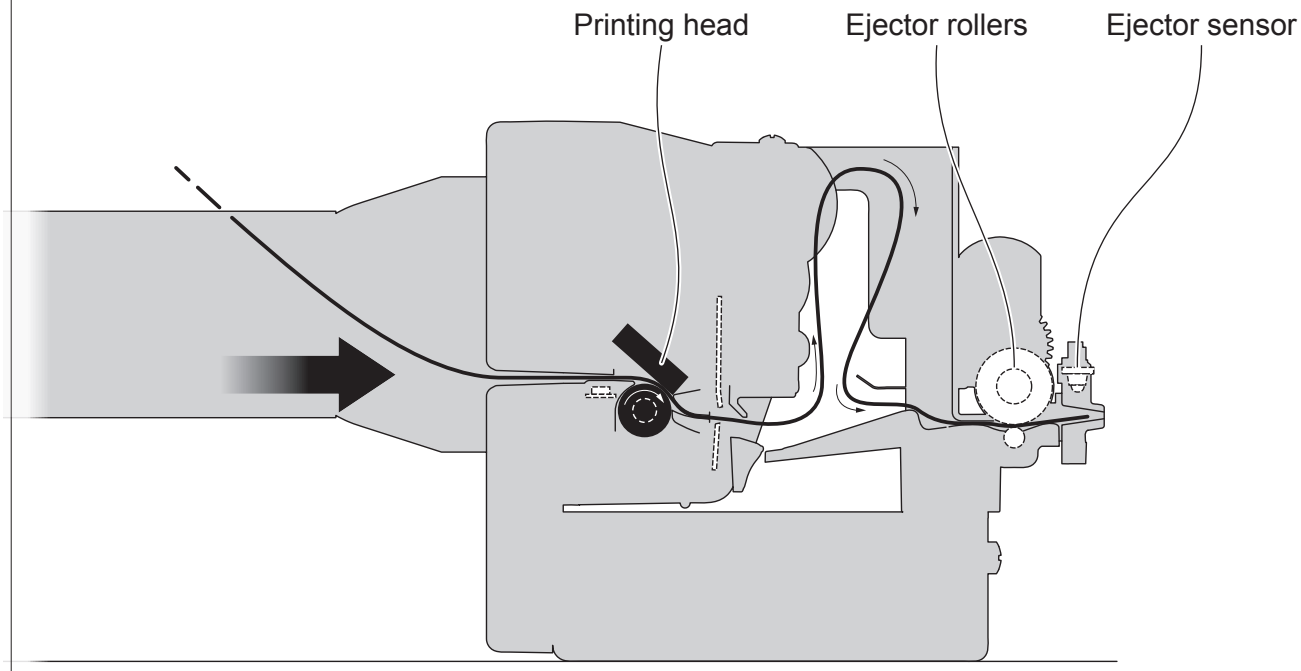

The ticket advances ahead to engage the ejector sensor and is caught between the ejector rollers. The printed portion of ticket is collected in the space between cutter and ejector while the device continues printing.

3

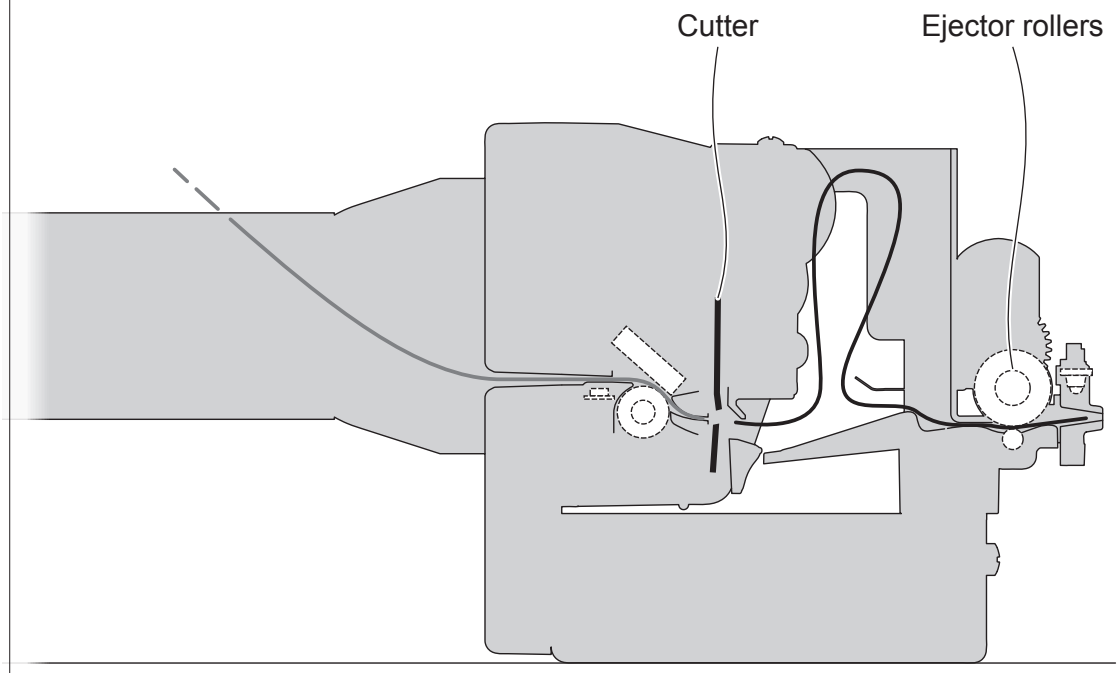

When printing ends, the device cuts the ticket printed.

4

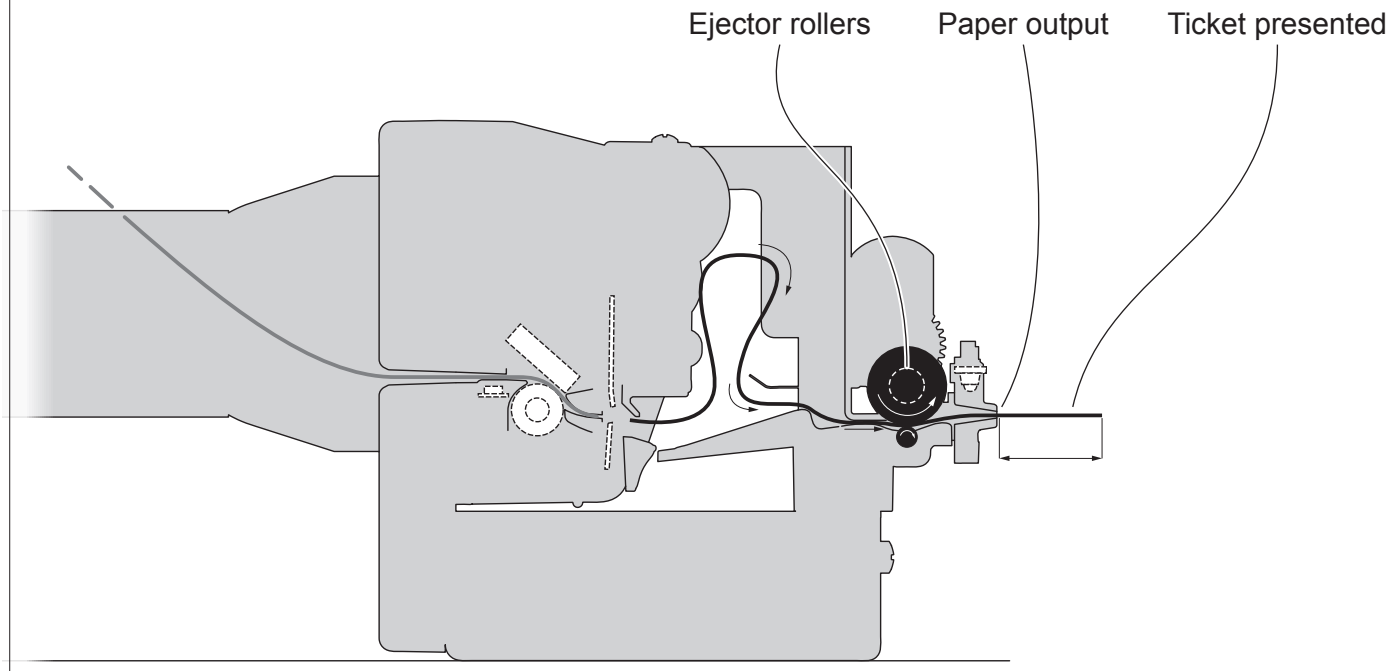

The device presents a portion of the ticket printed on the paper mouth.

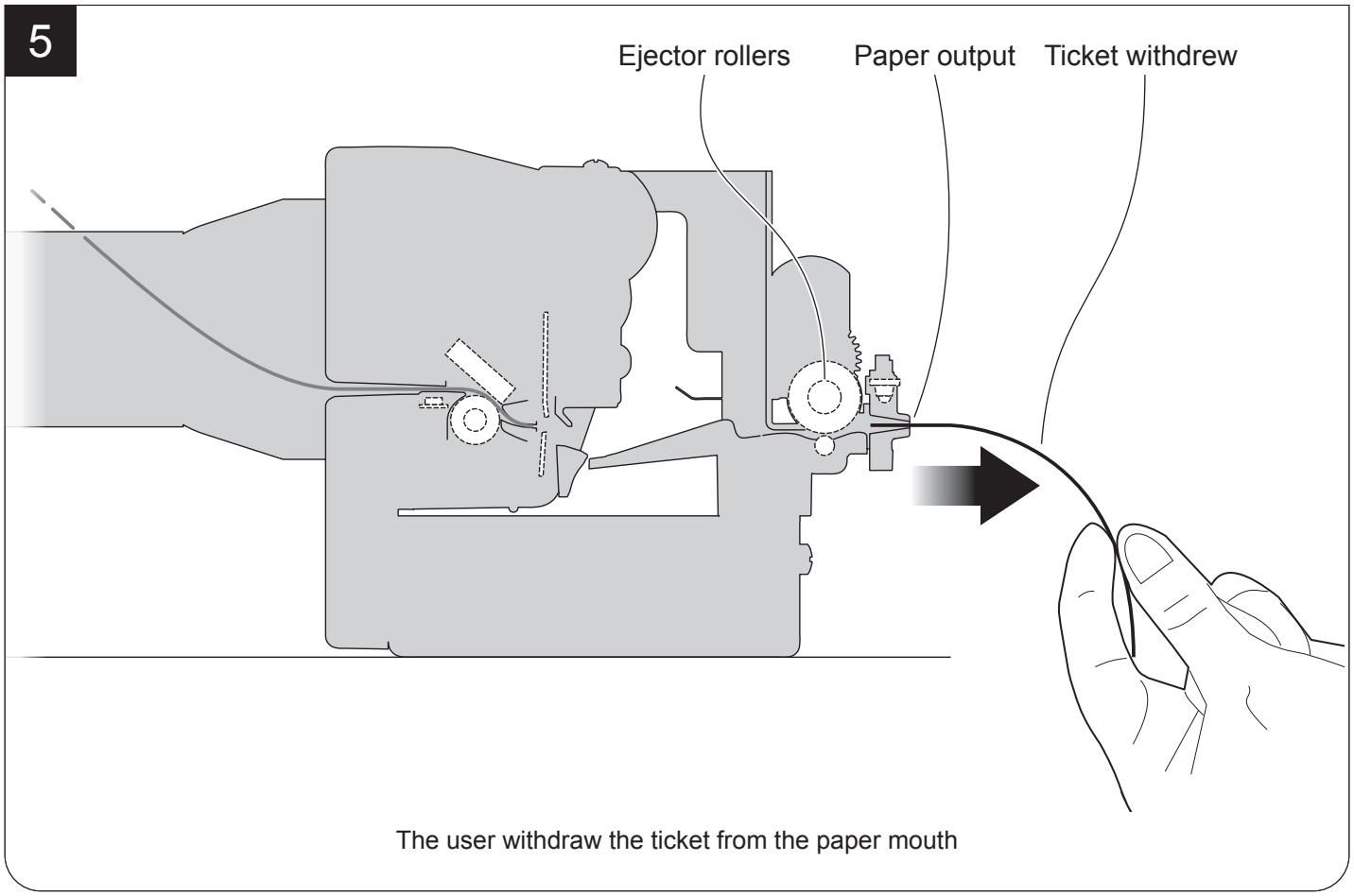

NOTE:
For further information, refer to the Commands Manual.

Modalità “EJECT CONTINUOUS PRINTING” (TG2480H EJC)

1

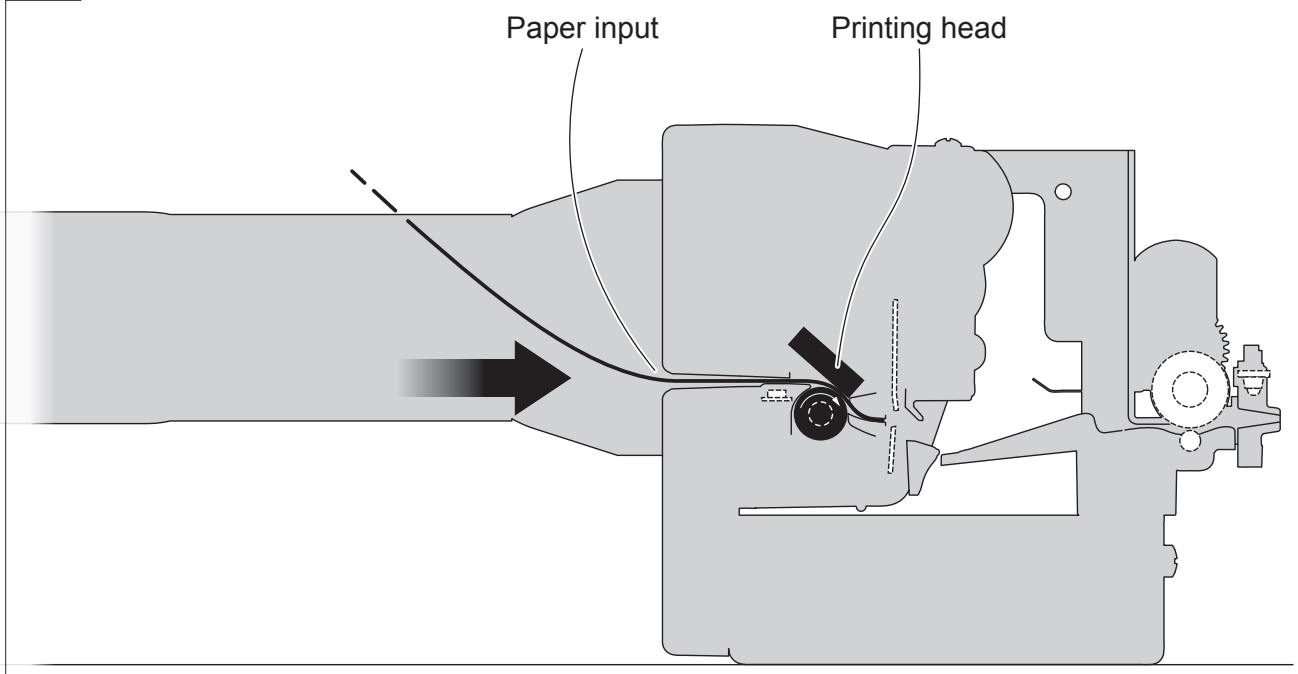

The device starts the ticket printing.

2

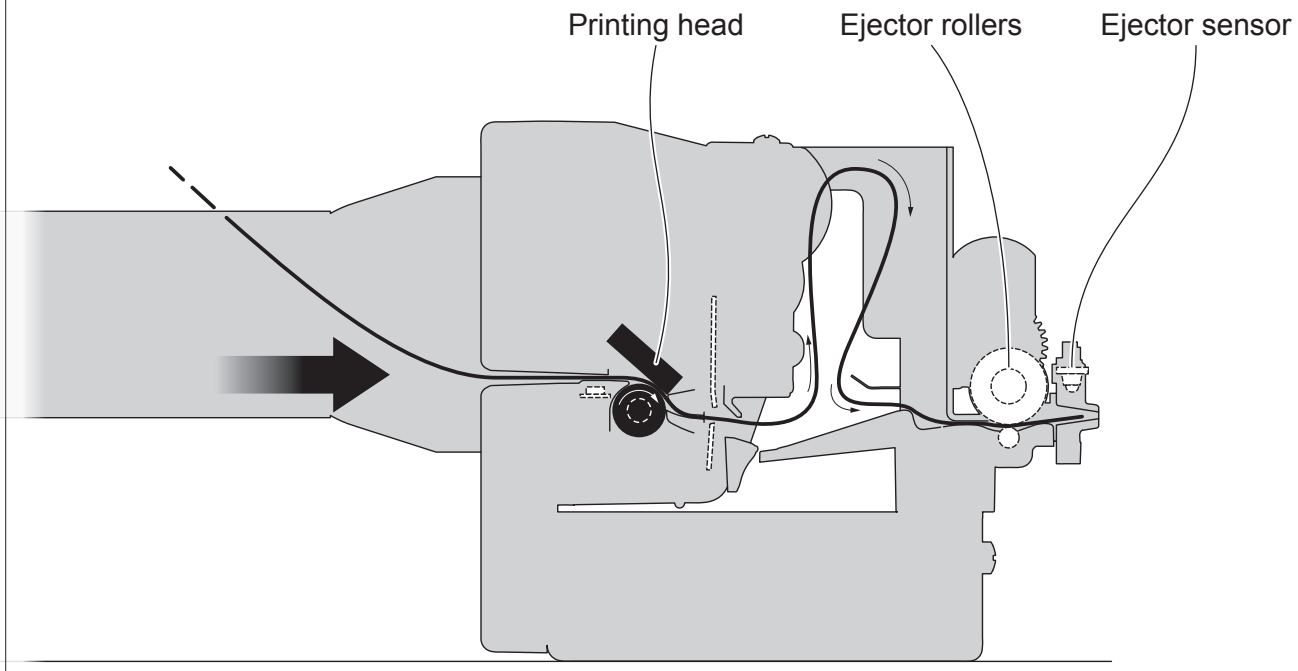

The ticket advances ahead to engage the ejector sensor and is caught between the ejector rollers. The printed portion of ticket is collected in the space between cutter and ejector while the device continues printing.

3

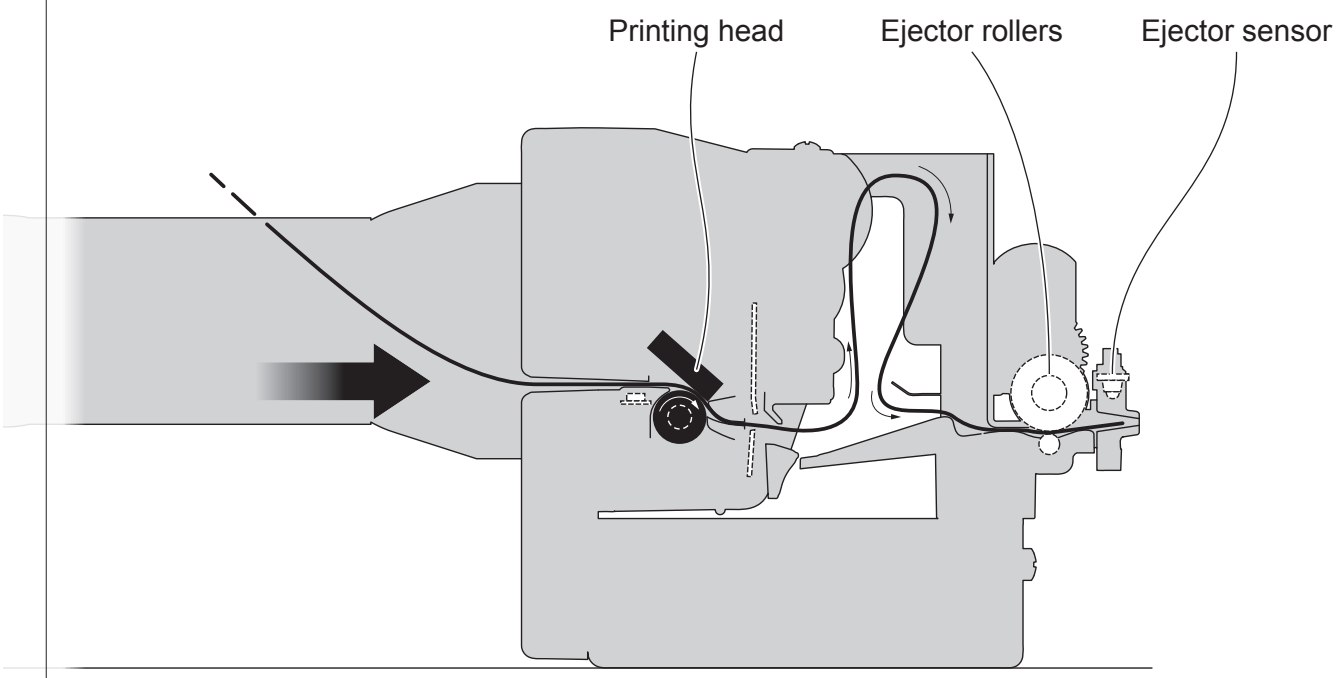

If the printed portion of ticket exceeds length of 35 cm, the device enters in continuous printing mode.

4

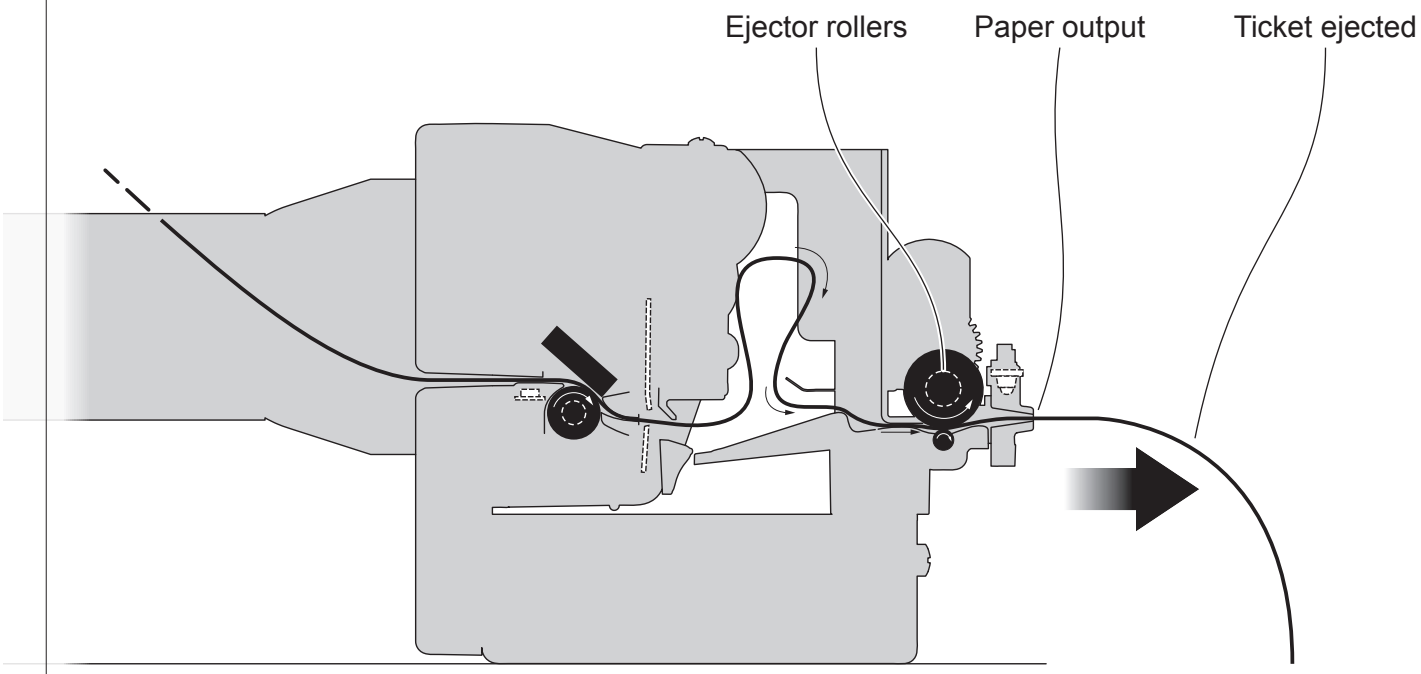

The device presents the ticket while it continues printing.

5

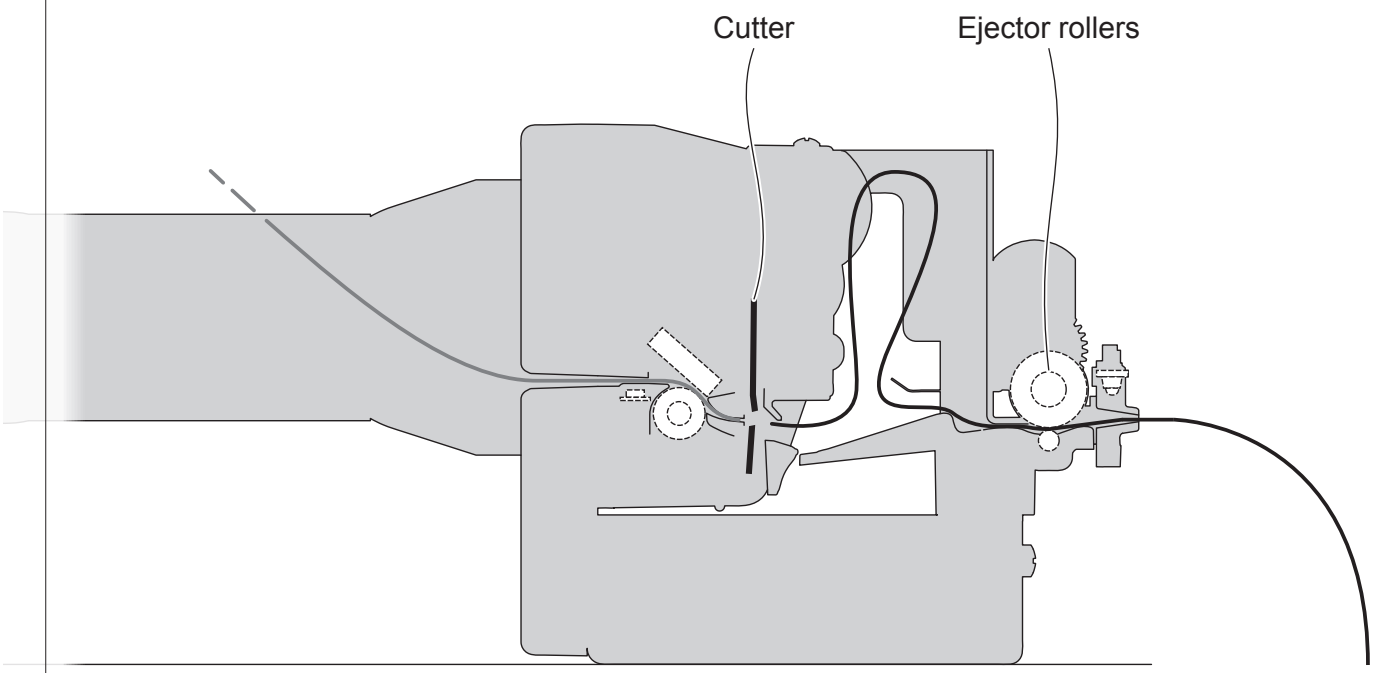

When printing ends, the device cuts the ticket printed.

6

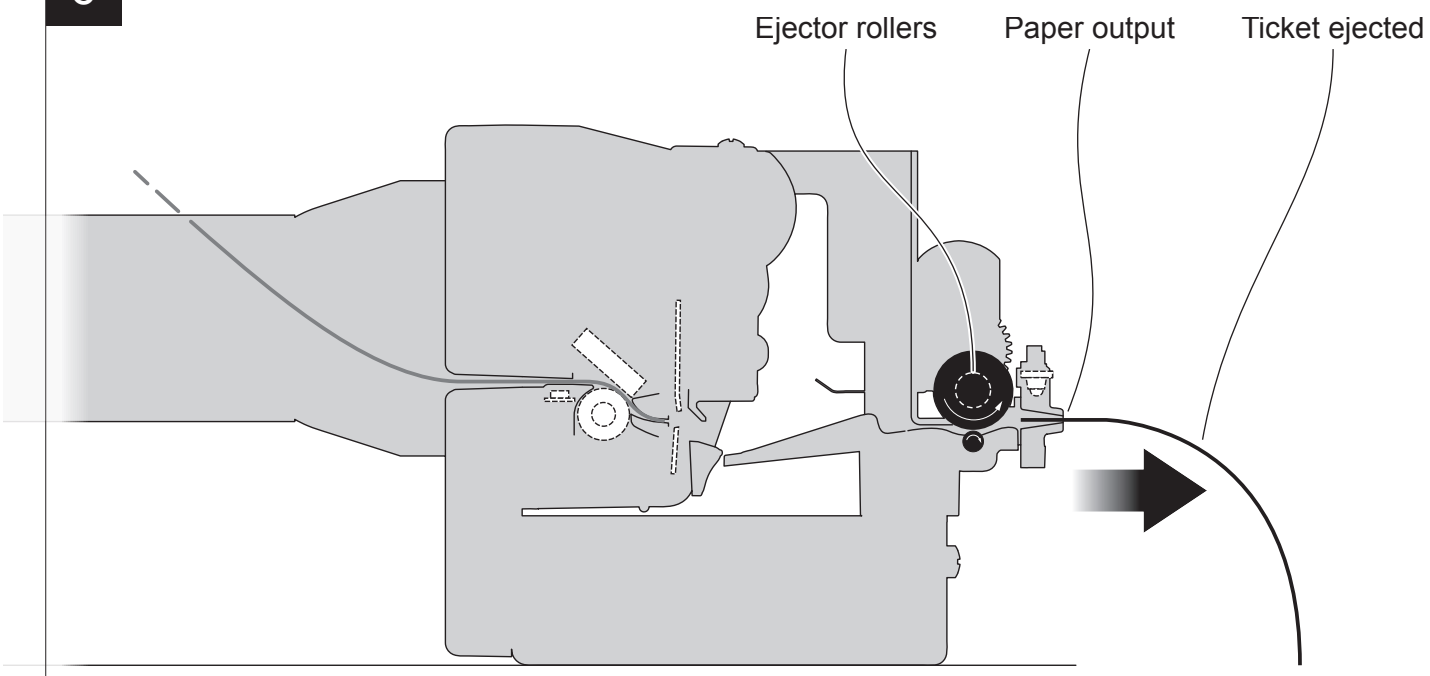

The device directly ejects the ticket

Modalità “PRESENT-EJECT CONTINUOUS PRINTING” (TG2480H EJC)

1

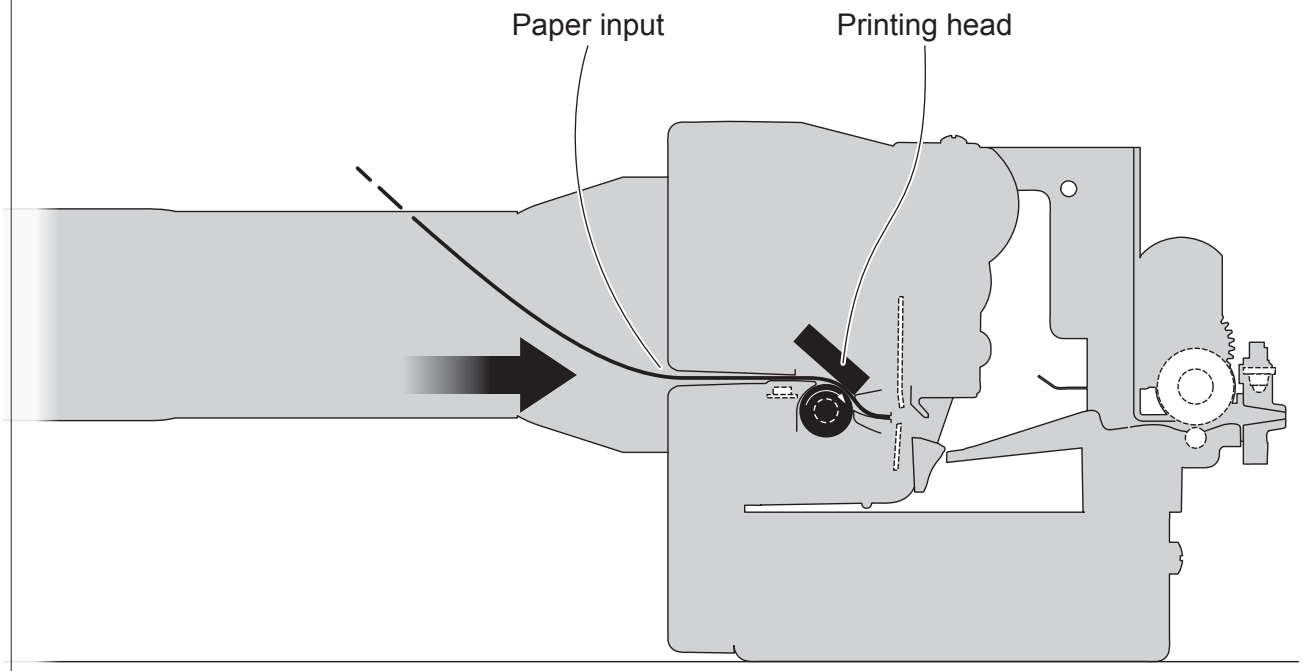

The device starts the ticket printing.

2

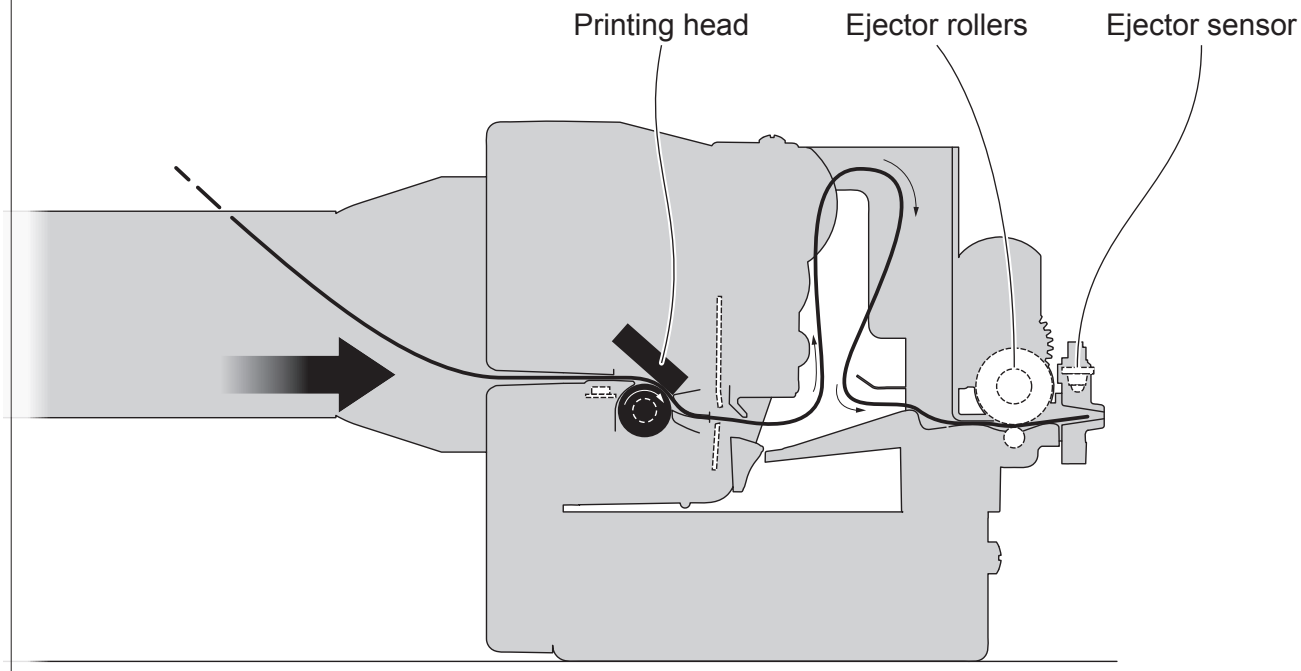

The ticket advances ahead to engage the ejector sensor and is caught between the ejector rollers. The printed portion of ticket is collected in the space between cutter and ejector while the device continues printing.

3

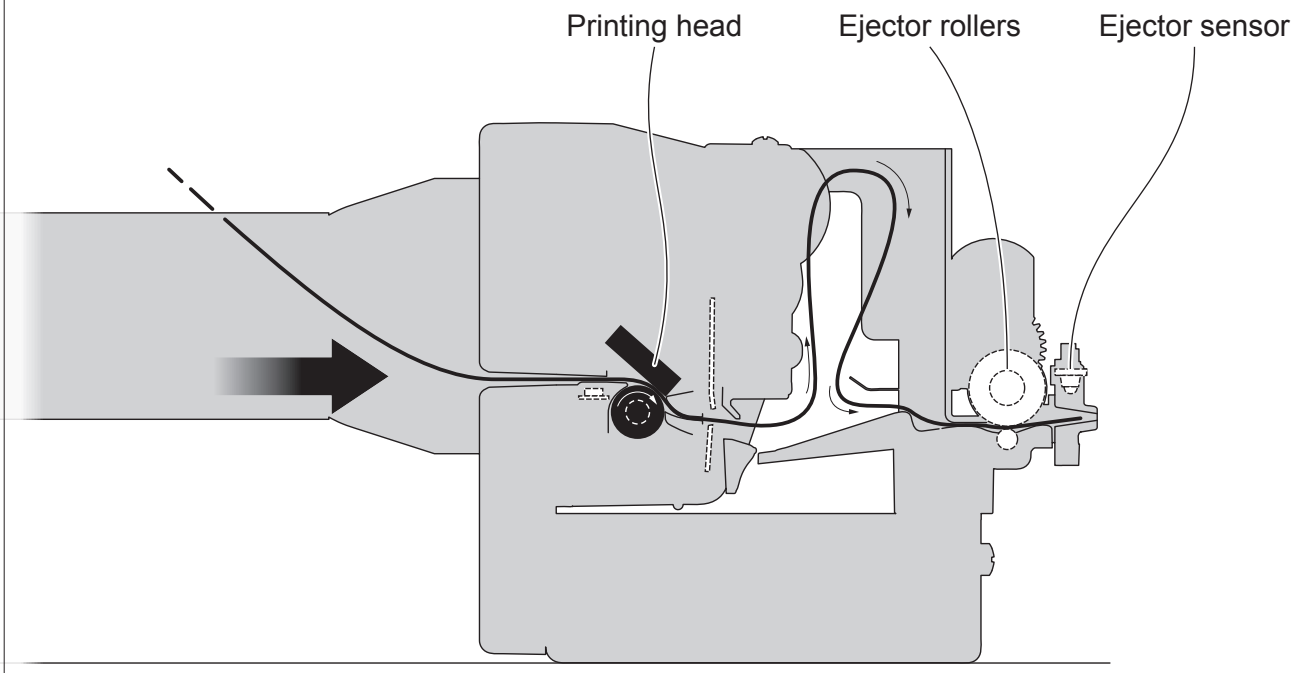

If the printed portion of ticket exceeds length of 35 cm, the device enters in continuous printing mode.

4

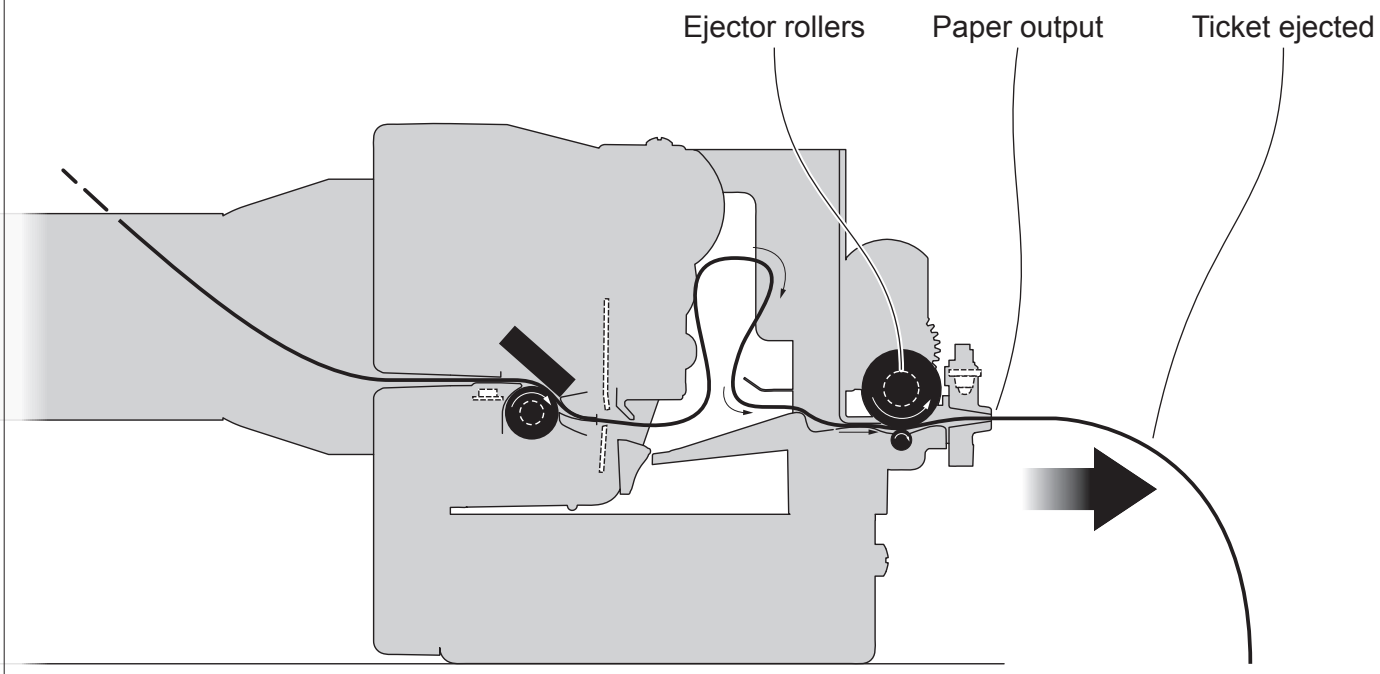

The device presents the ticket while it continues printing.

5

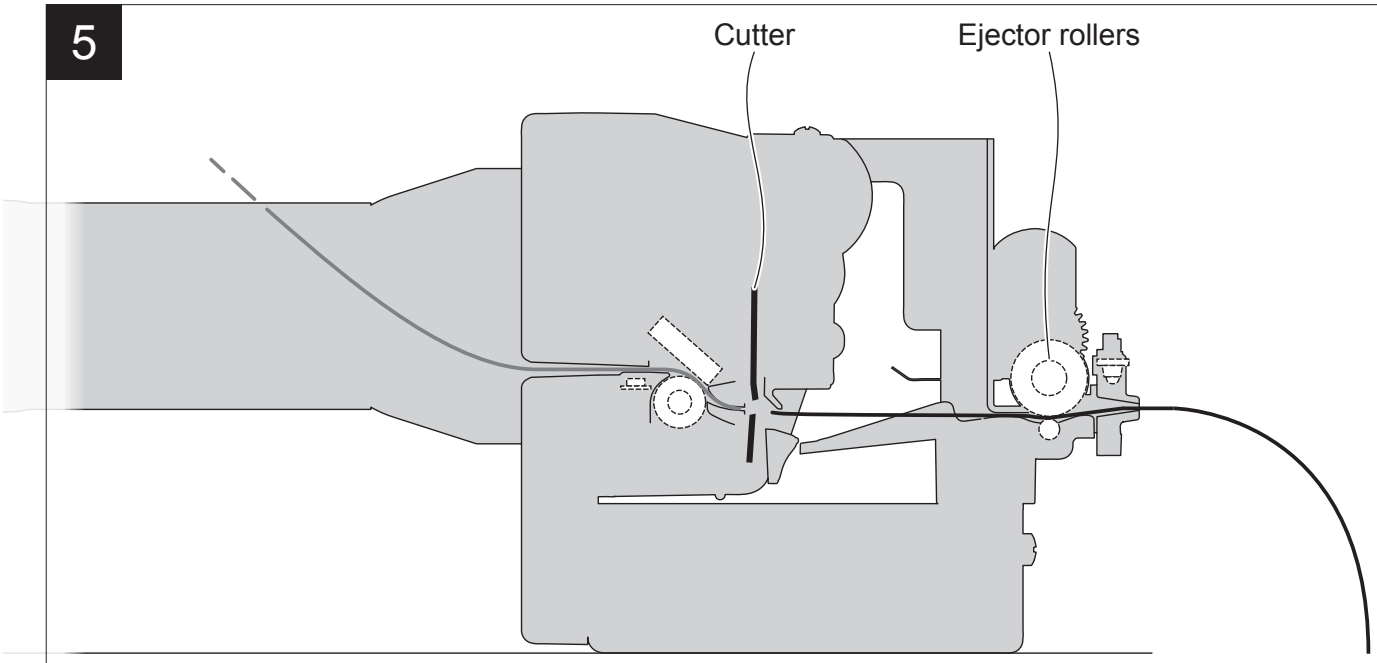

When printing ends, the device cuts the ticket printed.

6

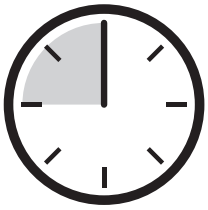

The ticket is waiting on the paper mouth for a preset period of time

7

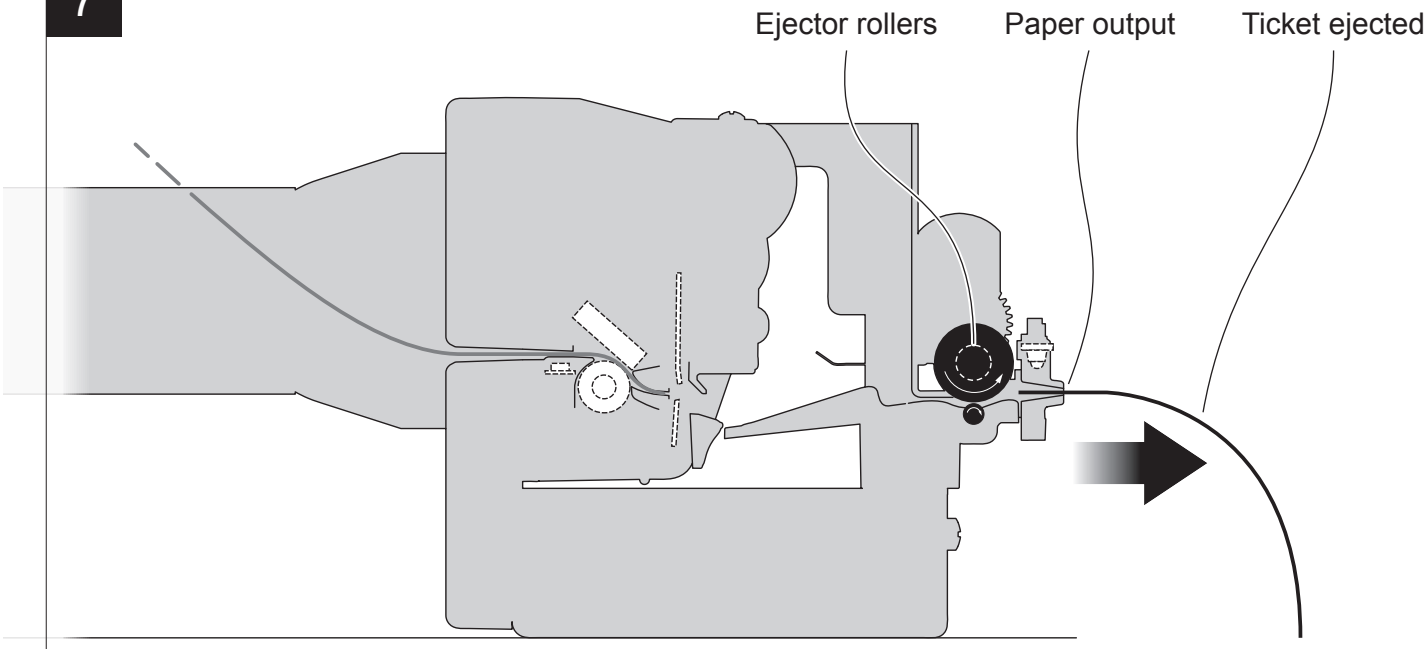

The device directly ejects the ticket.

Modalità “PRESENT CONTINUOUS PRINTING” (TG2480H EJC)

1

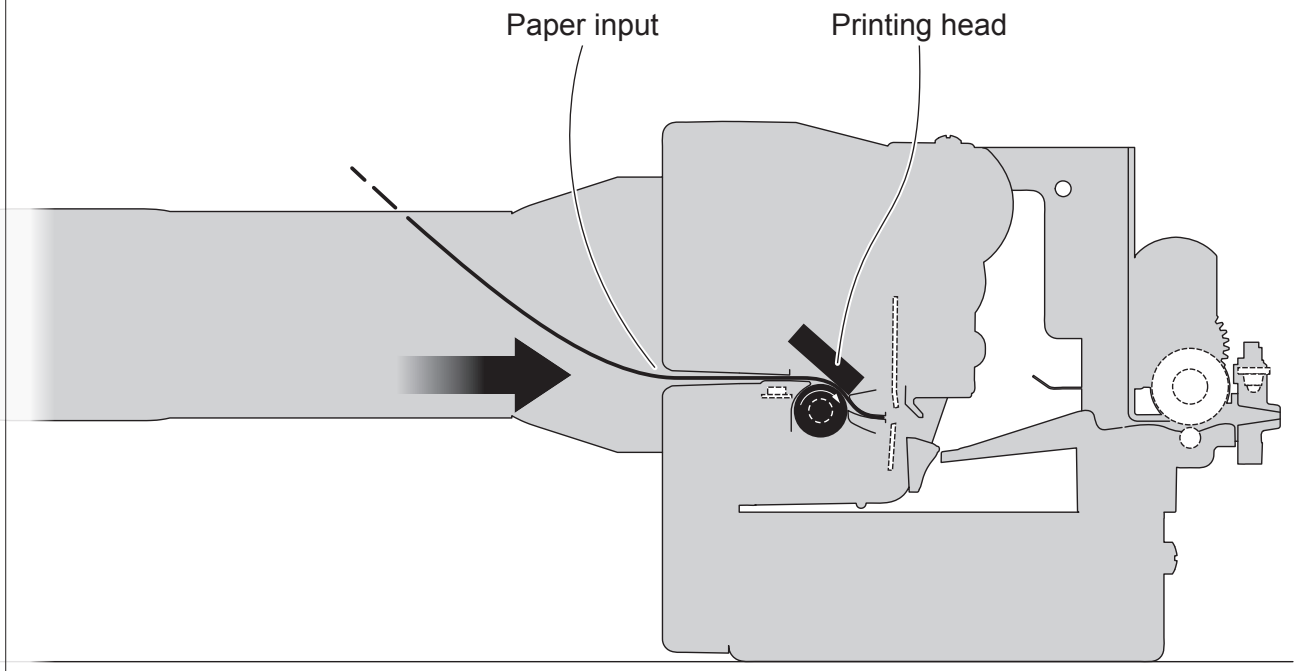

The device starts the ticket printing.

2

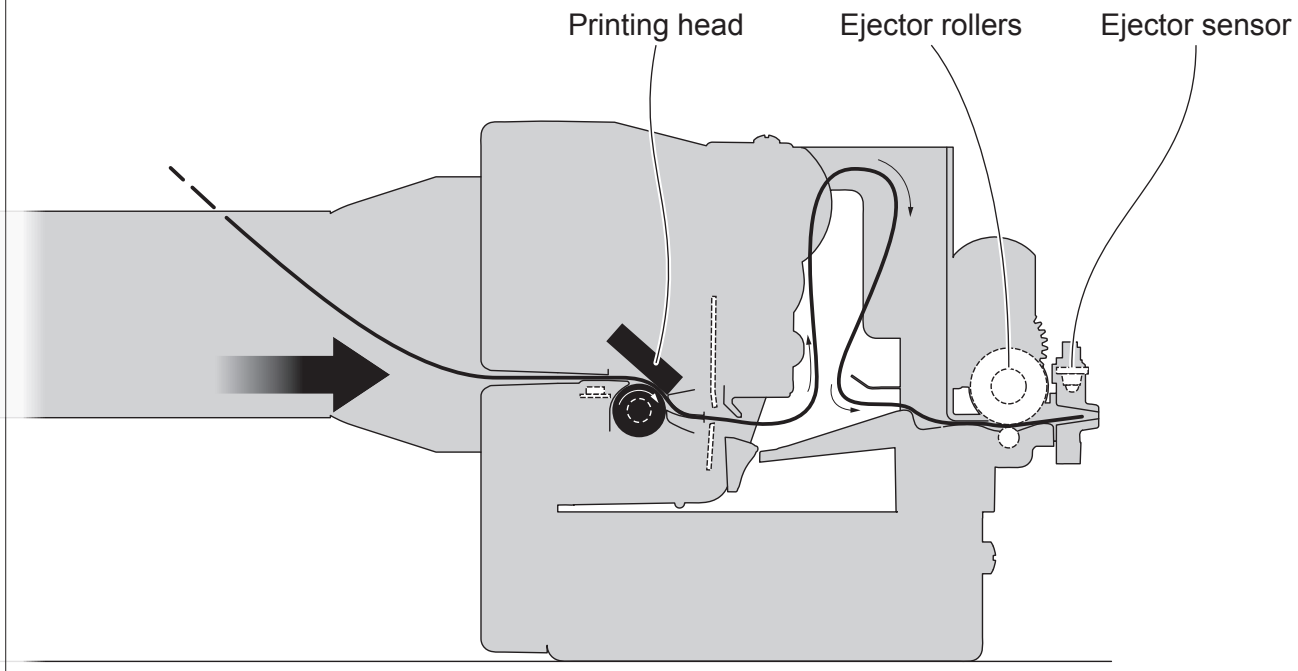

The ticket advances ahead to engage the ejector sensor and is caught between the ejector rollers. The printed portion of ticket is collected in the space between cutter and ejector while the device continues printing.

3

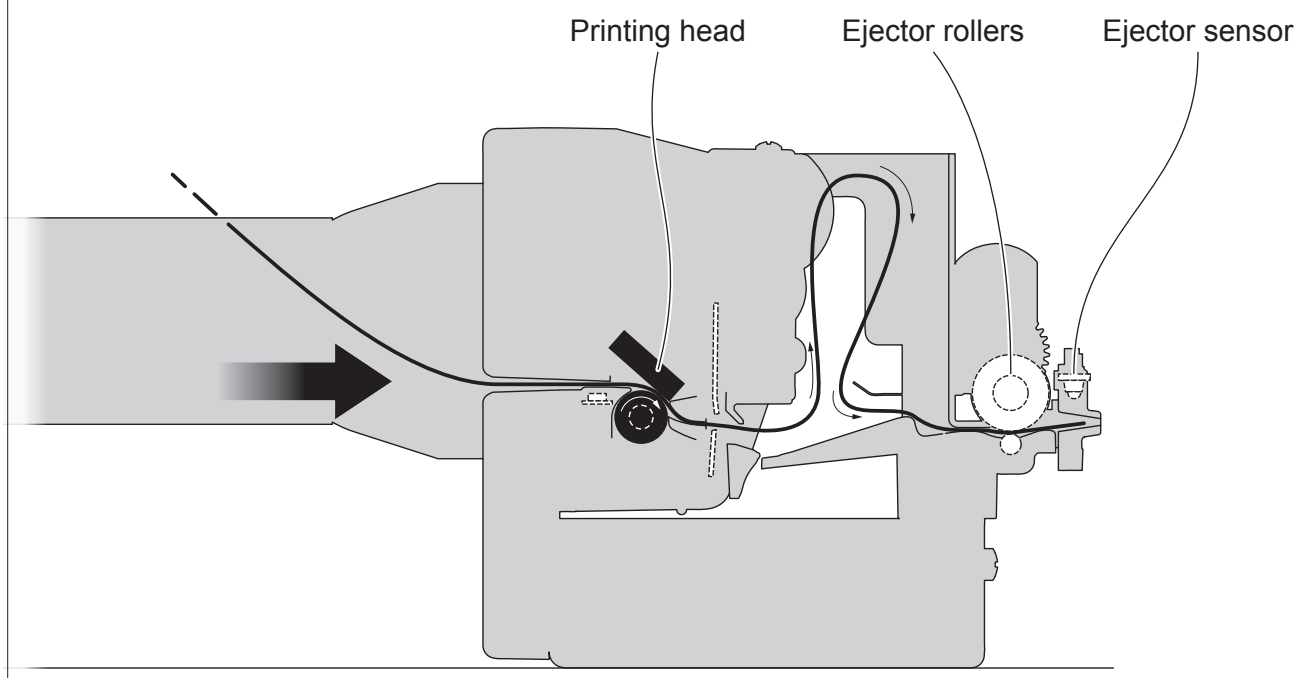

If the printed portion of ticket exceeds length of 35 cm, the device enters in continuous printing mode.

4

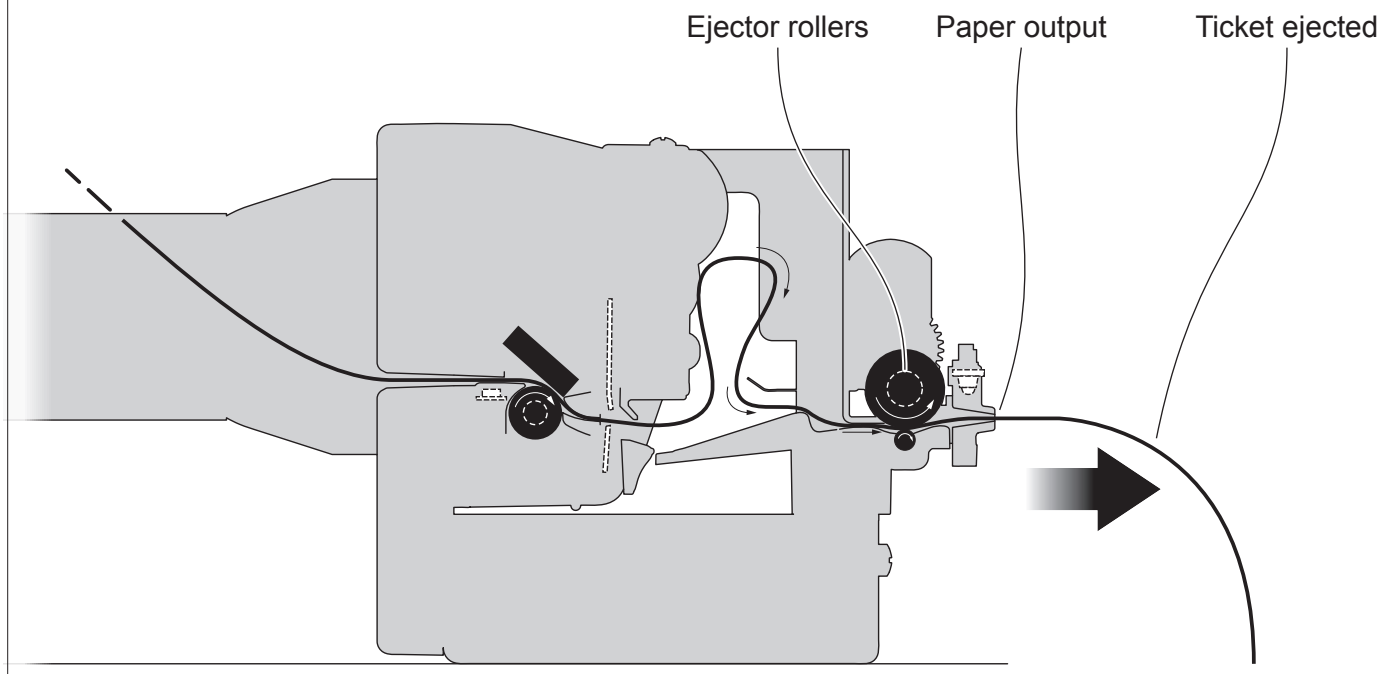

The device presents the ticket while it continues printing.

5

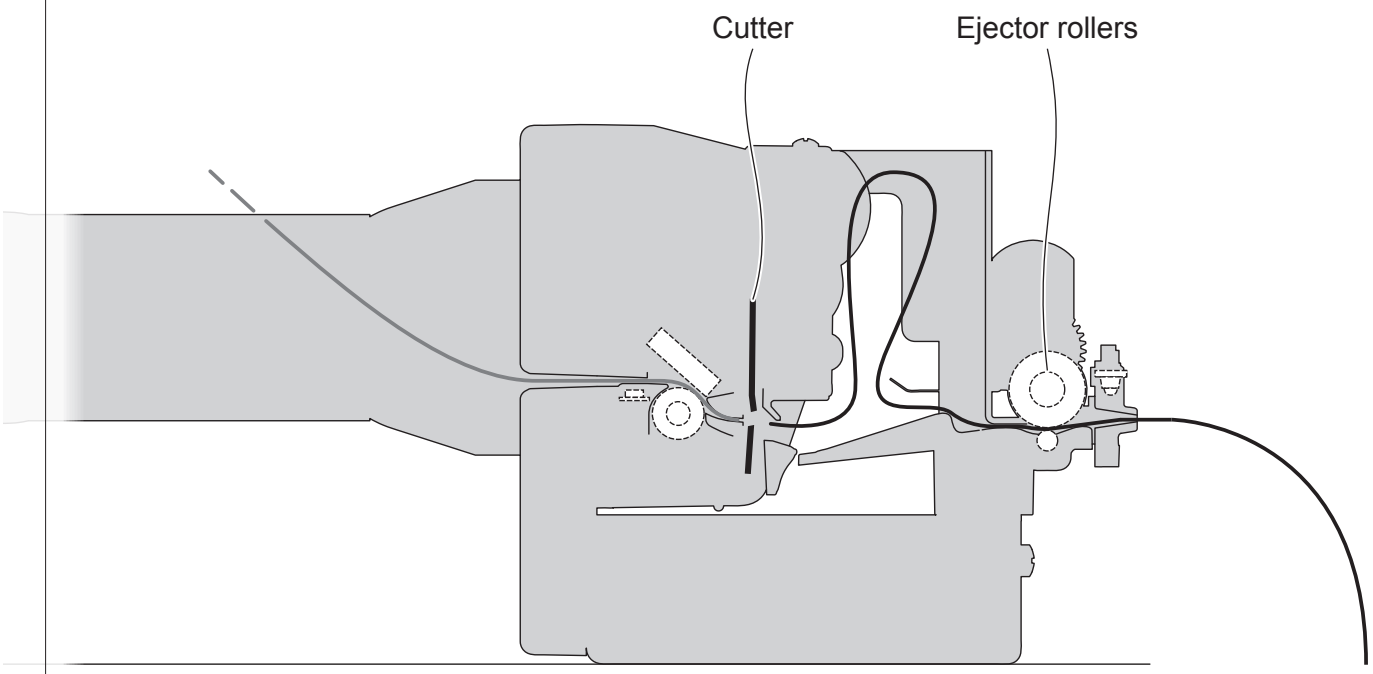

When printing ends, the device cuts the ticket printed.

6

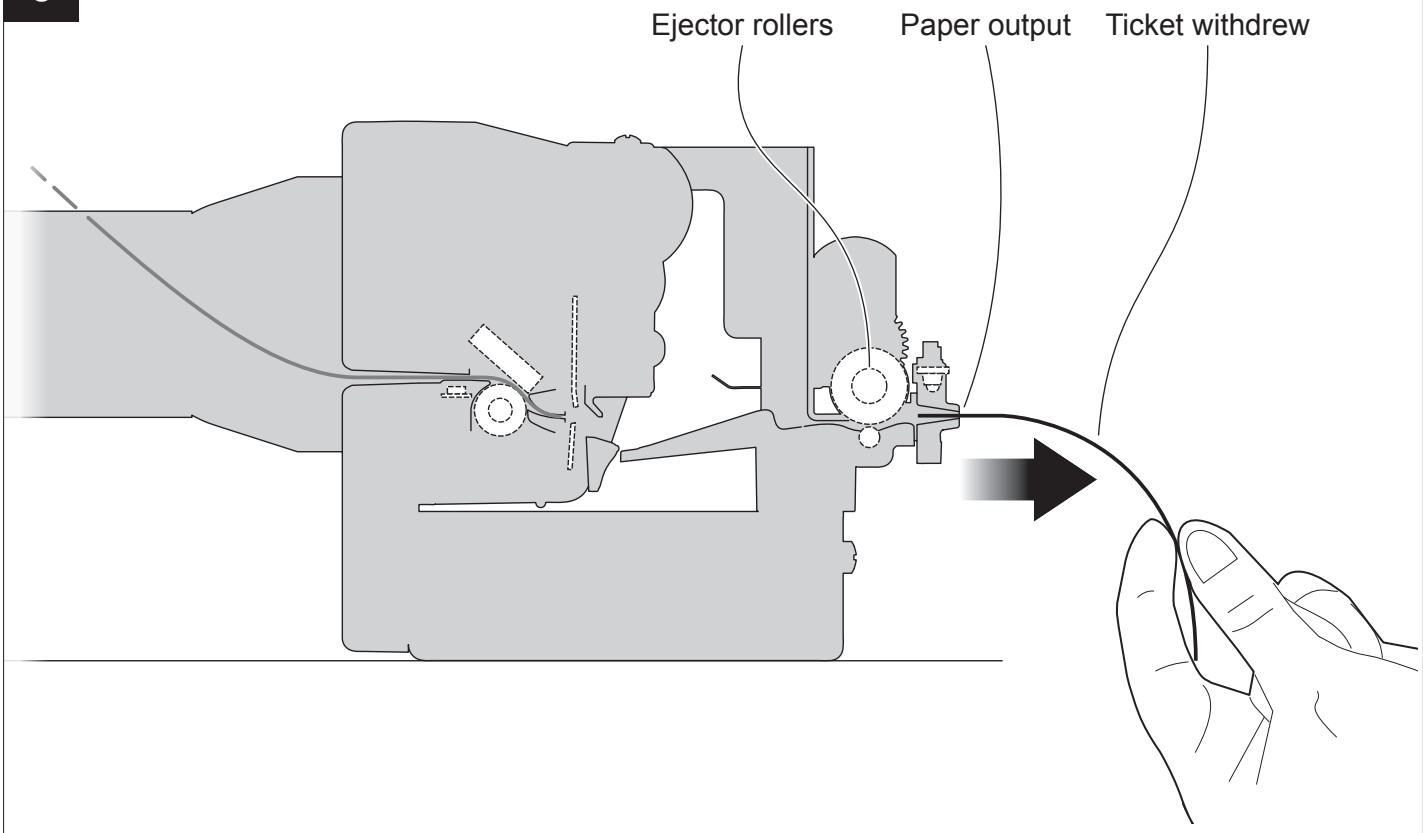

The user withdraw the ticket from the paper mouth.

6 CONFIGURATION

6.1 Configuration mode

To enter the configuration mode and print a setup report with the operating parameters of the device, proceed as follows.

1

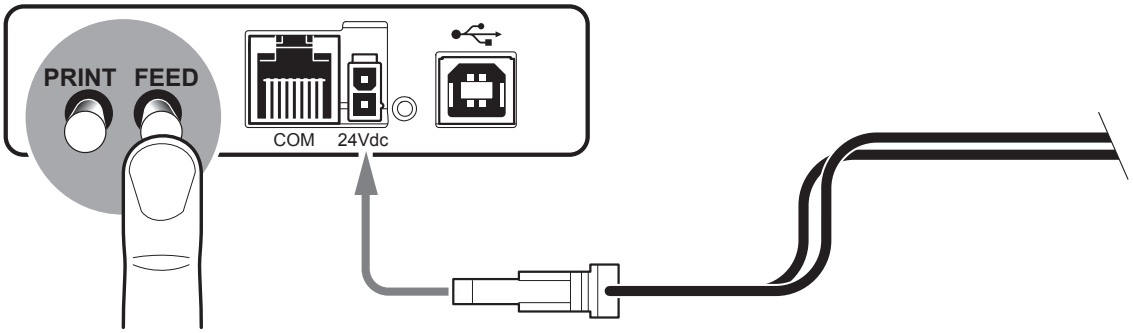

While pressing the FEED key,
switch on the device by inserting the power supply cable.

2

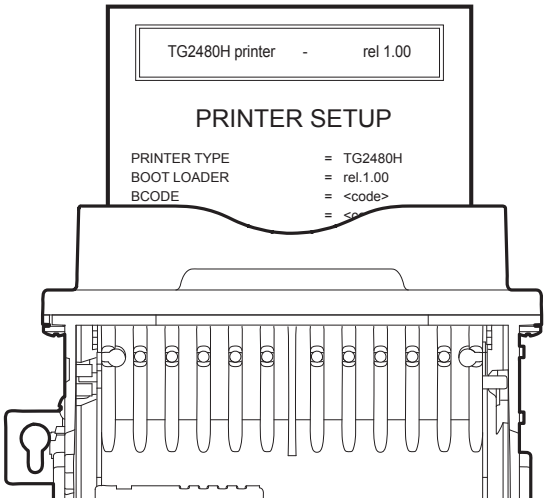

The device prints the report with
parameters for settings.

3

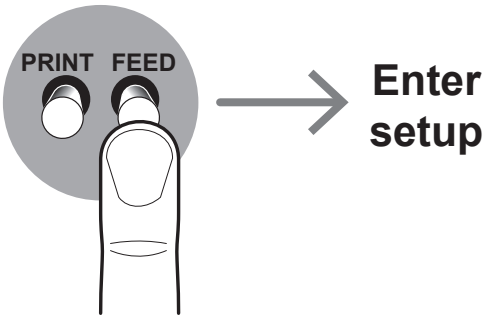

Hold down the FEED key to enter
the configuration mode.

6.2 Setup report

The following figure shows the setup report of the device. The shown values for parameters are sample values; for the list and the description of device parameters see the following paragraphs.

PRINTER NAME and FIRMWARE RELEASE

TG2480H printer - rel 1.00

PRINTER SETUP

DEVICE STATUS

PRINTER TYPE	=	TG2480H
BOOT LOADER	=	rel.1.00
BCODE	=	<code>
SCODE	=	<code>
HEAD VOLTAGE [V]	=	23.57
HEAD TEMP. [°C]	=	24
CUT COUNTER	=	0
POWERON COUNTER	=	100
PAPER PRINT [cm]	=	160
PWM B. MARK AVG.	=	50%
PWM B. MARK WHITE	=	0%
PWM B. MARK BLACK	=	100%

DEVICE PARAMETERS

Baud Rate	**19200 bps**
Data Length	**8 bits/chr**
Parity	**None**
Handshaking	**XON/XOFF**
Busy Condition	**RxFull**
Autofeed	**CR Disabled**
USB Address N	**0**
Print Mode	**Normal**
Code Table	**PC437**
Chars / inch	**A=11 B=15 cpi**
Tear Auto Cut	**Disabled**
Speed / Quality	**Normal**
Print Width	**56 mm**
B. mark align.	**Enabled Internal**
B. mark ThresH	**1.25V**
B. mark Dist.mm.	**00.0**
Print Density	**0 %**

KEYS FUNCTIONS

[Feed PUSH]	*enter setup*
[Feed FAST PUSH]	*skip setup*

6.3 Printer status

The printer operating status is indicated in the configuration print-out in which, next to the name of the components displayed, the following information is given:

PRINTER TYPE	*device model*
BOOT LOADER	*boot loader release*
BCODE	*release of the BCODE firmware module*
SCODE	*release of the SCODE firmware module*
HEAD VOLTAGE	*voltage of the head*
HEAD TEMP	*temperature of the head*
CUT COUNTER	*number of cuts made*
POWER ON COUNTER	*number of power-ups made*
PAPER PRINT	*centimetres of paper printed*
PWM B. MARK AVG.	*for future use*
PWM B. MARK WHITE	*for future use*
PWM B. MARK BLACK	*for future use*

6.4 Printer parameters

This printer allows the configuration of the parameters listed in the following table.
The parameters marked with the symbol [D] are the default values.
Settings remain active even after the printer has been turned off and they are stored in non-volatile memory.

BAUD RATE	*Communication speed of the serial interface:* *115200 [D] 19200 2400* *57600 9600 1200* *38400 4800* NOTE: Parameter valid only with serial interface.
DATA LENGTH	*Number of bit used for characters encoding:* *7 bits/car* *8 bits/car [D]* NOTE: Parameter valid only with serial interface.
PARITY	*Bit for the parity control of the serial interface:* *None [D] = parity bit omitted* *Even = even value for parity bit* *Odd = odd value for parity bit* NOTE: Parameter valid only with serial interface.
HANDSHAKING	*Handshaking:* *XON/XOFF [D] = software handshaking* *Hardware = hardware handshaking (CTS/RTS)* NOTES: Parameter valid only with serial interface. When the receive buffer is full, if handshaking is set to XON/XOFF, the printer sends the XOFF (0x13) on the serial port. When the receive buffer has cleared once again, if handshaking is set to XON/XOFF, the printer sends the XON (0x11) on the serial port.
BUSY CONDITION	*Activation mode for Busy signal:* *OffLine/ RXFull = Busy signal is activated when the printer is both in OffLine status and the buffer is full* *RXFull [D] = Busy signal is activated when the buffer is full* NOTE: Parameter valid only with serial interface.
AUTOFEED	*Setting of the Carriage Return character:* *CR disabled [D] =Carriage Return disabled* *CR enabled = Carriage Return enabled*

USB ADDRESS N	*Numerical address code for the univocal identification of the USB device (in case of more than a USB device connected with the same PC):* *0 D 2 4 6 8* *1 3 5 7 9*
PRINT MODE	*Printing mode:* *Normal D = enables printing in normal writing way* *Reverse = enables printing rotated 180 degrees*
CODE TABLE [num]	*Characters table (character code).* *PC437 D* *PC865* *U.D.P. (1)* *PC858* *PC850* *PC866* *PC860* *VISCII* *PC863* NOTE: This parameter is not printed in the setup report of models with simplified chinese font GB2312. or with extended chinese font GB18030. (1) : U.D.P. = User-defined page
CHARS / INCH	*Font selection:* *A = 11 cpi, B = 15 cpi D* *A = 15 cpi, B = 20 cpi* NOTES: CPI = Characters Per Inch
TEAR AUTO CUT	*Management of autocut function.* *Disabled D* *Enabled*
SPEED / QUALITY	*Setting of printing speed and printing quality:* *Normal D* *High Speed*
PRINT WIDTH	*Width of printing area:* *52 mm 64 mm 76 mm D* *56 mm 68 mm 80 mm* *60 mm 72 mm*

B. MARK ALIGNMENT

Management of the paper alignment:

Disabled [D] = the notch alignment is not performed
Enabled Internal [(1)] = the notch alignment is performed
Enabled External [(1)] = the notch alignment is performed

NOTE:
(1) : The difference between the "Enabled Internal" and "Enabled External" values is reserved for future use: both the values enable the notch alignment.

B. MARK THRESHOLD

Threshold value for the recognition of the presence of notch by the notch sensor:

0.75V	*1.50V*	*2.25V*
1.00V	*1.75V*	*2.75V*
1.25V [D]	*2.00V*	*2.50V*

NOTE: If the "B. Mark alignment" parameter is disabled, the "B. Mark threshold" parameter is not printed.

B. MARK DISTANCE

"B. Mark distance" is the minimum distance (in mm) between the upper edge of ticket and the notch.
The numeric value of the distance is made up with the following three parameters for the setting of three digits (two for the integer part of the number and one for the decimal part):

B. MARK DISTANCE [mm x 10]	*Setting the digit for tens:*				
	0 [D]	*1*			
B. MARK DISTANCE [mm x 1] [(1)]	*Setting the digit for units:*				
	0 [D]	*2*	*4*	*6*	*8*
	1	*3*	*5*	*7*	*9*
B. MARK DISTANCE [mm x .1]	*Setting the digit for decimals:*				
	0 [D]	*2*	*4*	*6*	*8*
	1	*3*	*5*	*7*	*9*

NOTES:
For example, to set the notch distance to 10 mm, modify the parameters as follows:
B. Mark Distance [mm x 10] = 1
B. Mark Distance [mm x 1] = 0
B. Mark Distance [mm x .1] = 0

If the "B. Mark alignment" parameter is disabled, the "B. Mark alignment" parameter is not printed

(1) : The values of "B. Mark distance [mm x 1]" > 2 can be set only if "B. Mark distance [mm x 10]" = 0.

PRINT DENSITY

Adjusting the printing density:

-50%	*-12%*	*+25%*
-37%	*0 [D]*	*+37%*
-25%	*+12%*	*+50%*

6.5 Hexadecimal dump

This function is used for the diagnosis of the characters received from the communications port. Characters are printed as hexadecimal code and the corresponding ASCII code (see below). Each line is preceded by a counter in hexadecimal that indicates the number of bytes received.

During the startup, if you hold down the FEED key, the printer enters the self-test routine and print the setup report.
The printer remains in standby until a key is pressed or characters are received through the communication port (Hexadecimal Dump mode). For each character sent, the ticket shows the hexadecimal value and the ASCII codes (if the characters are underlined, the receive buffer is full). Shown below is an example of a Hexadecimal Dump:

HEXADECIMAL DUMP

```
31  32  33  34  35  ...        12345 ...
39  30  31  32  33  ...        90123 ...
37  38  39  75  69  ...        789ui ...
68  6B  6A  73  64  ...        hkjsd ...
73  64  66  6B  6A  ...        sdfkj ...
66  73  64  66  6B  ...        fsdfk ...
65  69  6F  79  75  ...        eioyu ...
6F  72  69  75  77  ...        oriuw ...
6F  75  77  65  72  ...        ouwer ...
77  65  72  69  6F  ...        werio ...
72  69  6F  75  77  ...        riouw ...
6B  6C  73  64  66  ...        klsdf ...
64  66  6B  73  64  ...        dfksd ...
73  64  66  6B  6A  ...        sdfkj ...
66  6B  F2  6A  73  ...        fk≥j ...
6A  6B  6C  68                 jklh
```

7 MAINTENANCE

7.1 Paper jam

TG2480H STD, TG2480H TKOUT

1

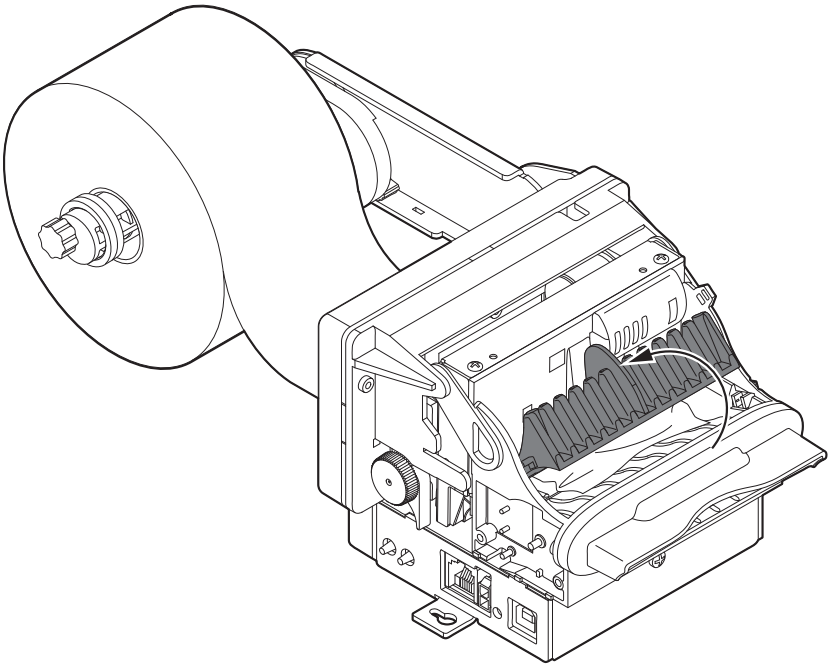

Lift the inspection door.

2

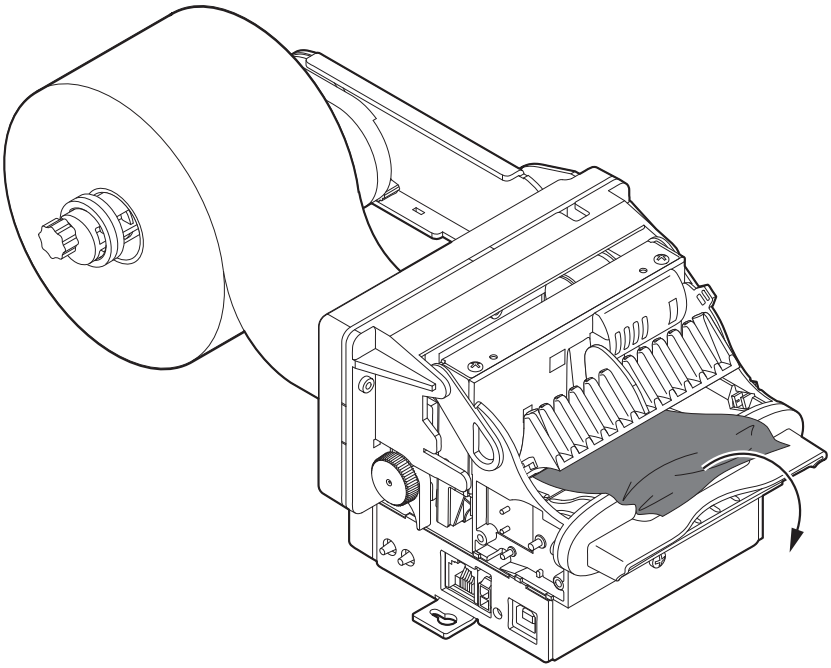

Remove any scraps of paper
from the front side of the device.

3

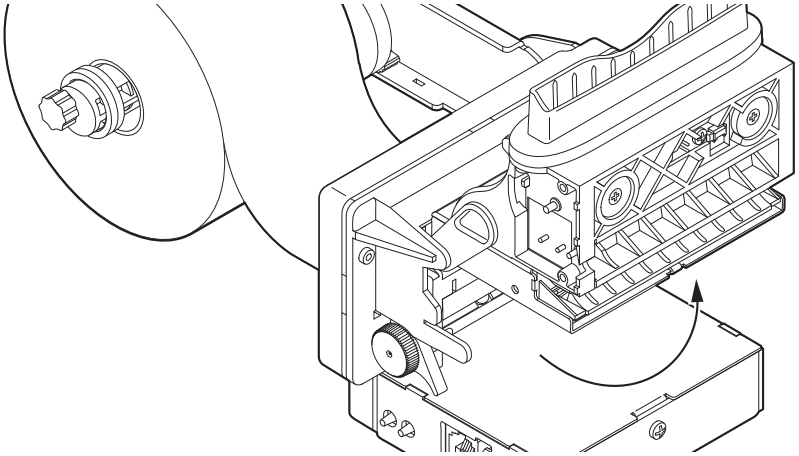

Open the device
(see previous paragraphs).

4

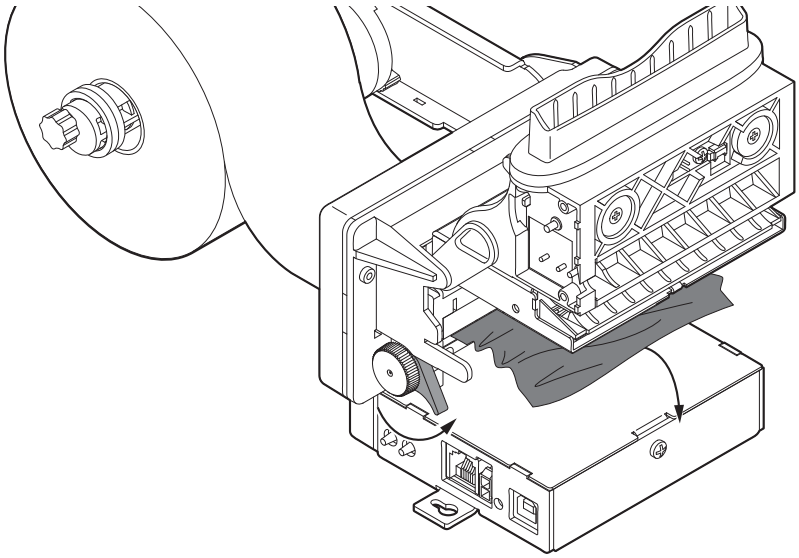

Lift the unlocking lever for the platen roller
and remove any scraps of paper from the printing mechanism.

5

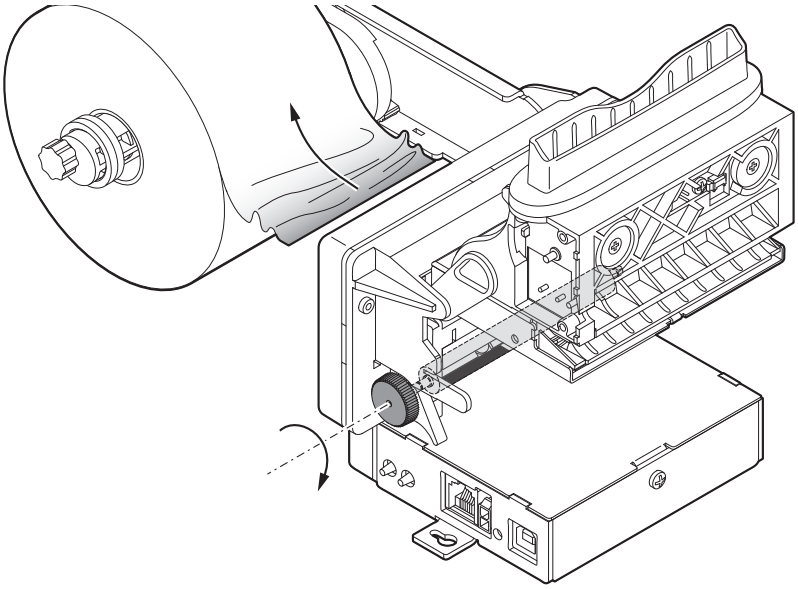

Rotate clockwise the platen roller
to eject the paper from the rear side of the device.

TG2480H EJC

1

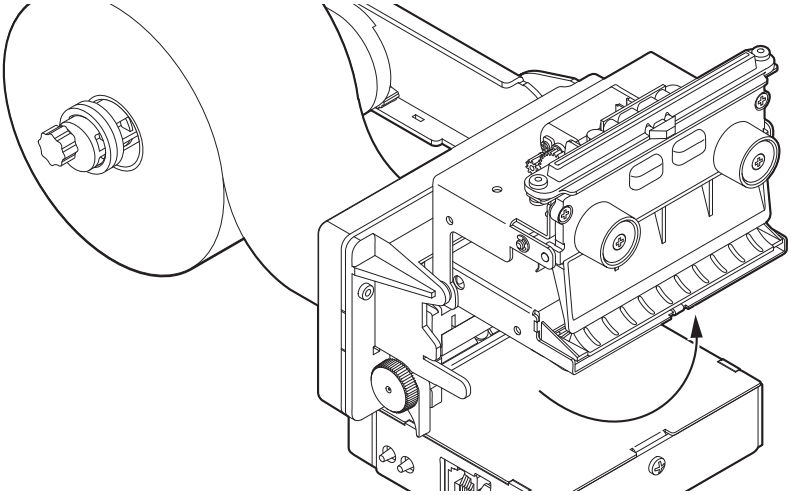

Open the device
(see previous paragraphs).

2

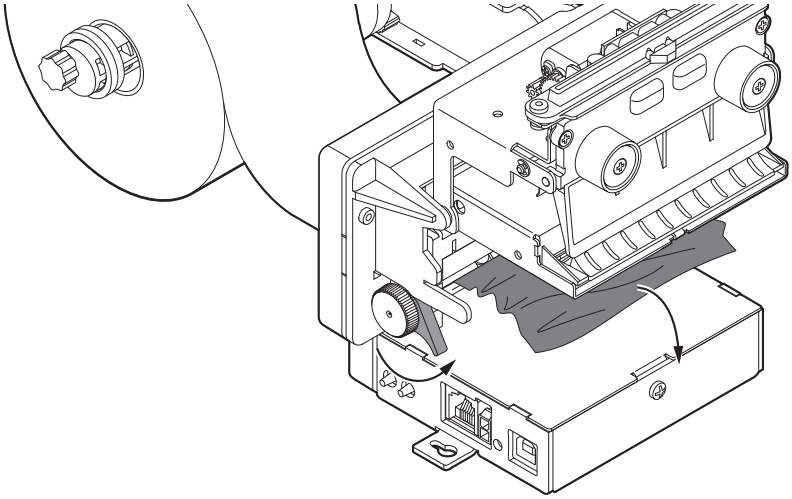

Lift the unlocking lever for the platen roller
and remove any scraps of paper from the printing mechanism.

3

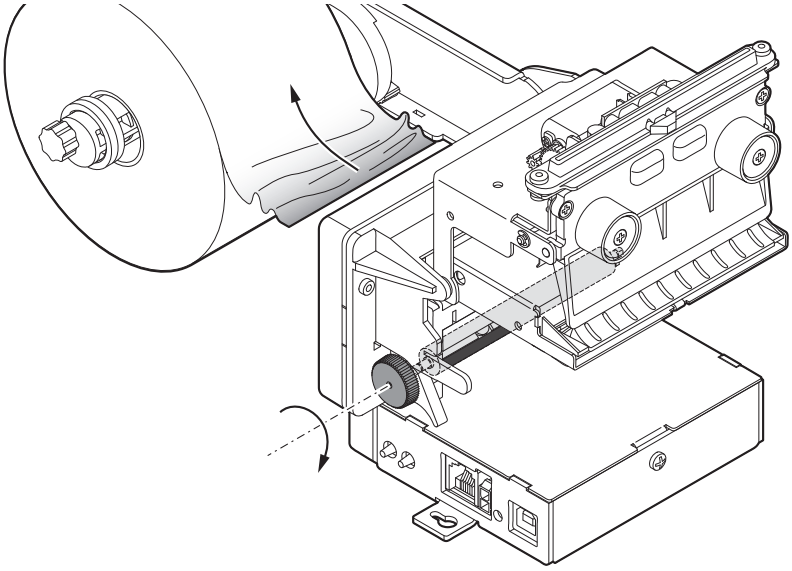

Rotate clockwise the platen roller
to eject the paper from the rear side of the device.

7.2 Planning of cleaning operations

The regular cleaning of the device keeps the print quality and extends its life. The following table shows the recommended planning for the cleaning operations.

EVERY PAPER CHANGE	
Rollers	Use isopropyl alcohol
EVERY 5 PAPER CHANGES	
Paper path	Use compressed air or tweezers
Cutter	Use compressed air
Ejector	Use compressed air
Sensors	Use compressed air
EVERY 6 MONTHS OR AS NEEDED	
Printer case	Use compressed air or a soft cloth

For specific procedures, see the following pages.

NOTE:
If you use the device in dusty environments, you must reduce the intervals between the cleaning operations.

7.3 Cleaning

For periodic cleaning of the device, see the instructions below

Rollers

1

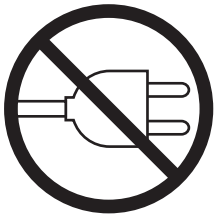

Disconnect the power supply cable and open the device (see previous paragraphs).

2

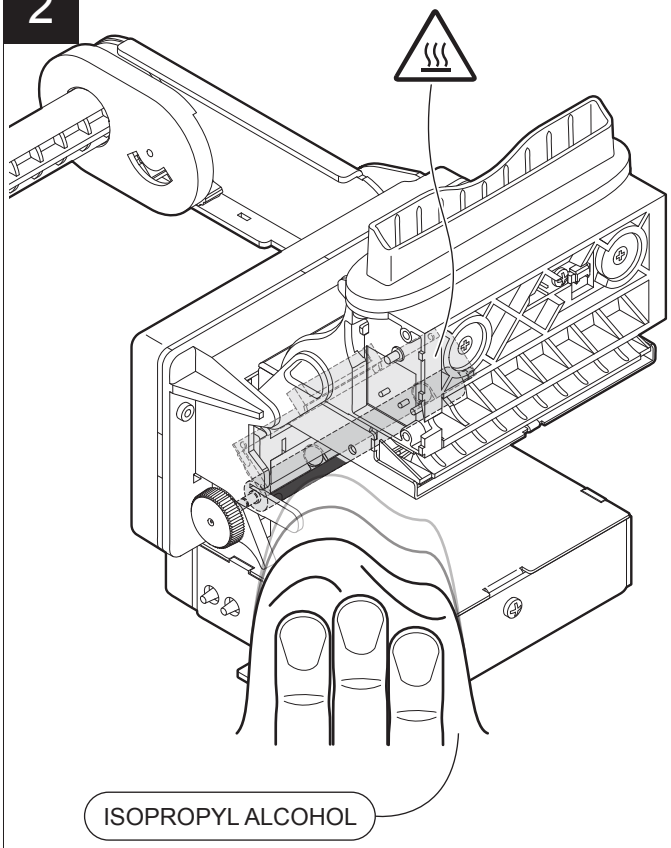

ATTENTION:
Do not use solvents, or hard brushes.
Do not let water or other liquids get inside the machine.

Clean the printing roller by using a non-abrasive cloth moistened with isopropyl.

Paper path

1

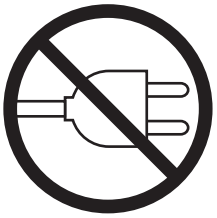

Disconnect the power supply cable and open the device (see previous paragraphs).

2

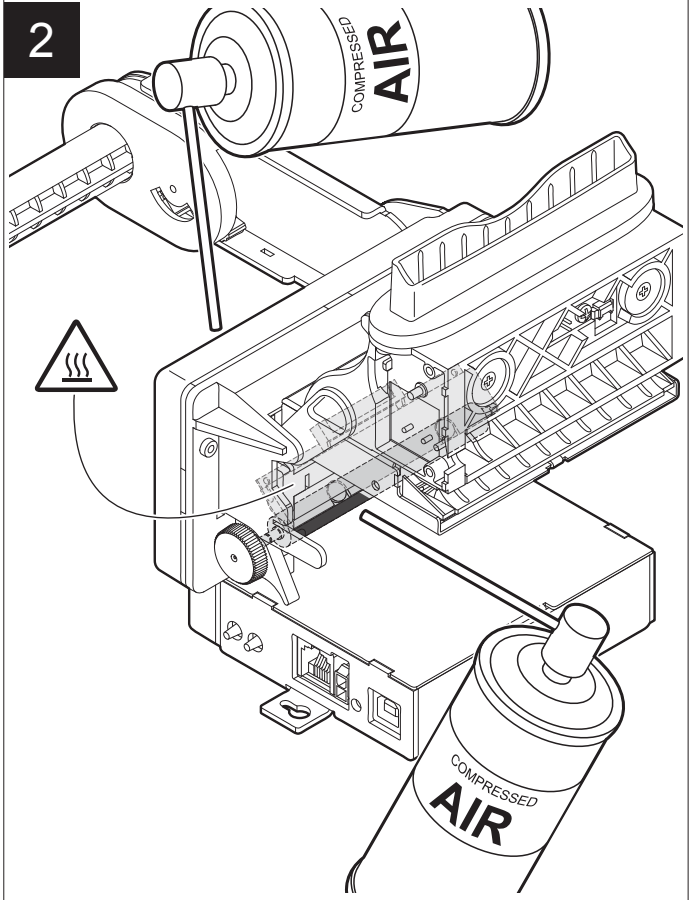

ATTENTION:
Do not use alcohol, solvents, or hard brushes.
Do not let water or other liquids get inside the machine.

Remove any scraps of paper and the accumulated paper dust on the platen roller and in areas near to the paper presence sensor.

Cutter

1

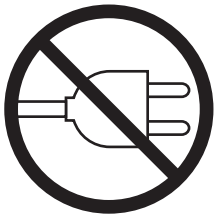

Disconnect the power supply cable and open the device (see previous paragraphs).

2

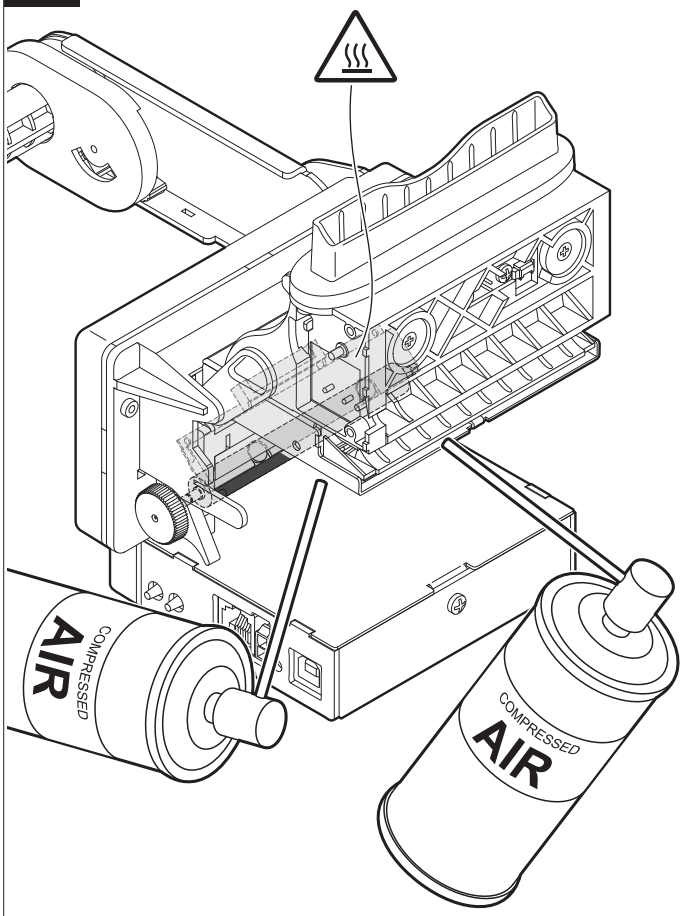

ATTENTION:
Do not use alcohol, solvents, or hard brushes.
Do not let water or other liquids get inside the machine.

Remove any scraps of paper and the accumulated paper dust on the input and the output of cutter.

Case

1

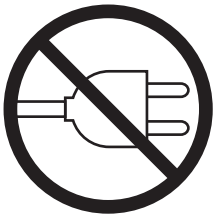

Disconnect the power supply cable (see previous paragraphs).

2

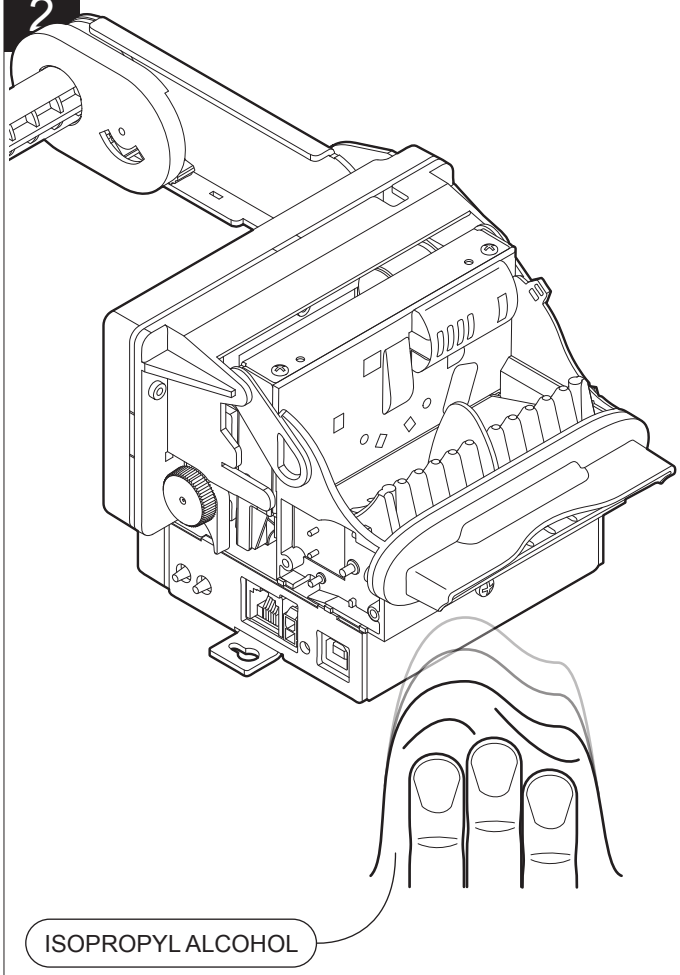

ATTENTION:
Do not use alcohol, solvents, or hard brushes.
Do not let water or other liquids get inside the machine.

To clean the device, use compressed air or a soft cloth

Ejector (TG2480H STD, TG2480H TKOUT)

1

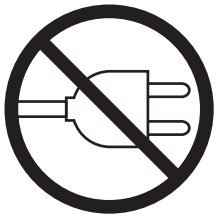

Disconnect the power supply cable and
lift the inspection door (see previous paragraphs).

2

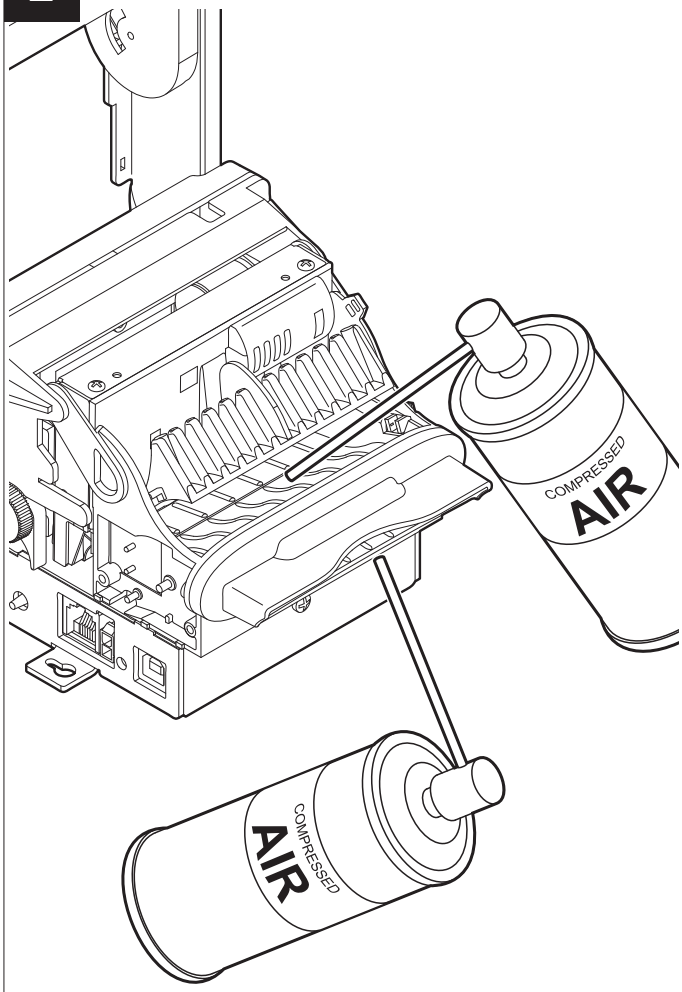

ATTENTION:
Do not use alcohol, solvents, or hard brushes.
Do not let water or other liquids get inside the machine.

Remove any scraps of paper and the accumulated paper dust under the inspection door and on the paper output.

Ejector (TG2480H EJC)

1

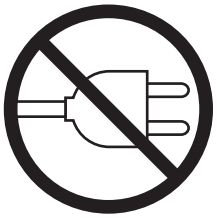

Disconnect the power supply cable and
lift the ejector group (see previous paragraphs).

2

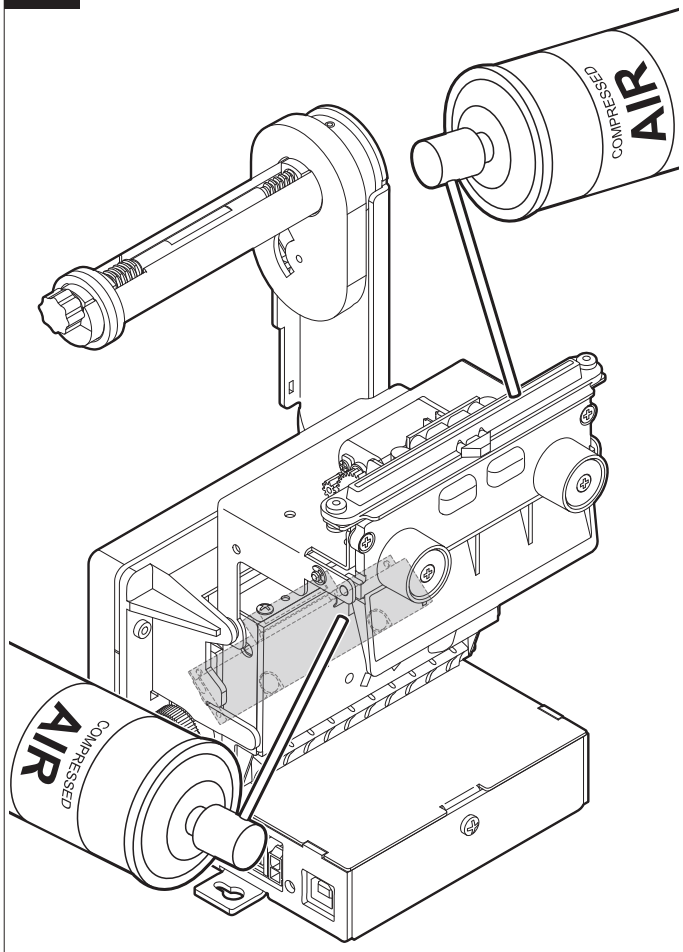

ATTENTION:
Do not use alcohol, solvents, or hard brushes.
Do not let water or other liquids get inside the machine.

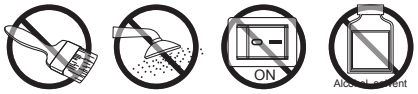

Remove any scraps of paper and the accumulated paper dust on the input and the output of the ejector.

Sensors (TG2480H STD, TG2480H TKOUT)

1

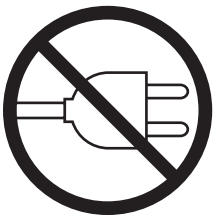

Disconnect the power supply cable and open the inspection door (see previous paragraphs).

2

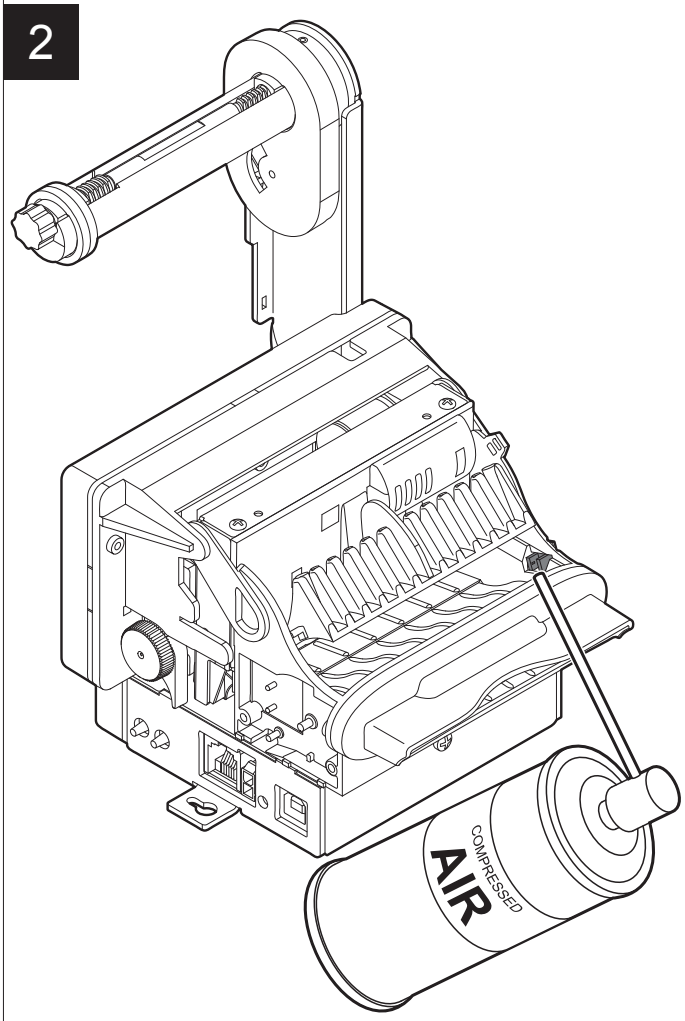

ATTENTION:
Do not use alcohol, solvents, or hard brushes.
Do not let water or other liquids get inside the machine.

Clean the anti-jamming sensor by using compressed air.

3

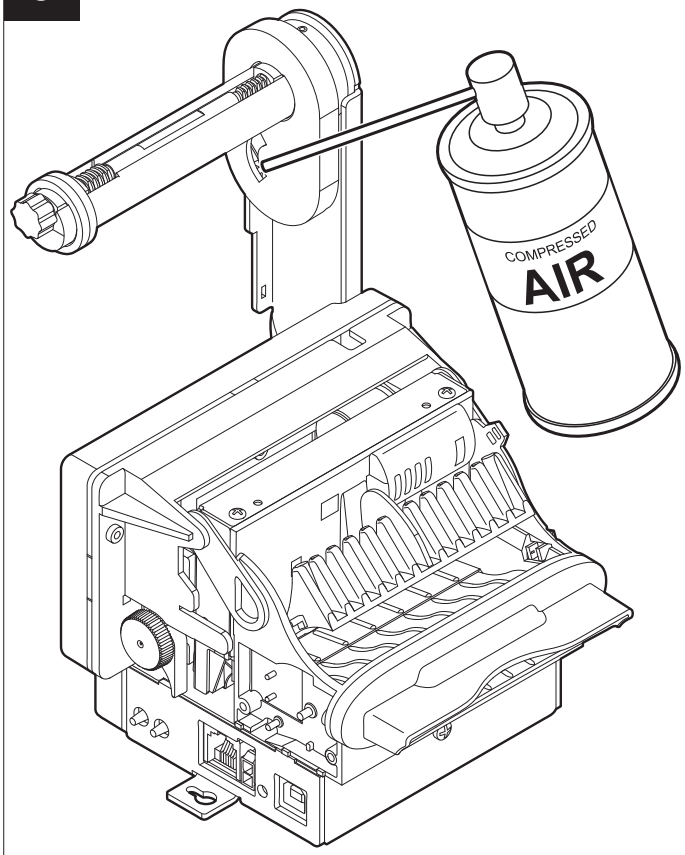

ATTENTION:
Do not use alcohol, solvents, or hard brushes.
Do not let water or other liquids get inside the machine.

Clean the low paper sensor by using compressed air.

7.4 Upgrade firmware

WARNING: During communication between PC and device for the firmware update it is strictly forbidden to disconnect the communication cable or to remove the power supply of the devices not to endanger the proper functioning of the machine.

NOTES:
The latest firmware of the device is available in the download area of the web site www.custom.biz

Install on the PC used for printer upgrading the UPG-CEPRN software available in the download area of the web site www.custom.biz.

Update via serial interface

Proceed as follows:

1. Write down the product code (14 digits) printed on the product label (see paragraph 3.3).
2. Go to the web site www.custom.biz and download the appropriate firmware release from the DOWNLOAD area.
3. Print the SETUP report (see chapter 6).
4. Switch OFF the device.
5. Connect the device to the PC using a serial cable (see paragraph 4.3).
6. Switch ON the device.
7. Launch the software UPGCEPRN.
8. Select the update file .PSW location:

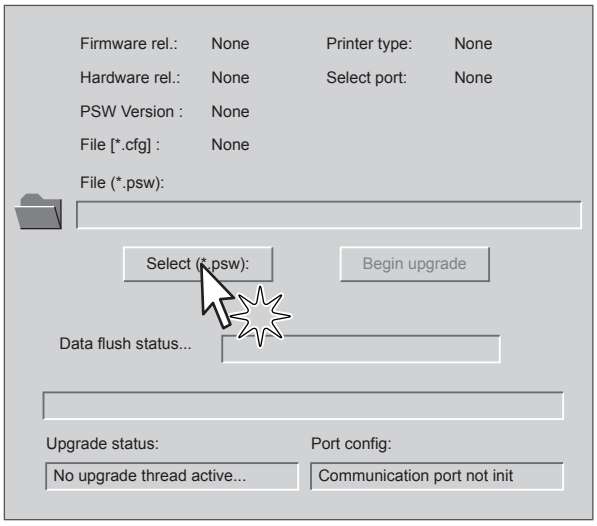

9. Select the serial communication port (ex. COM1):

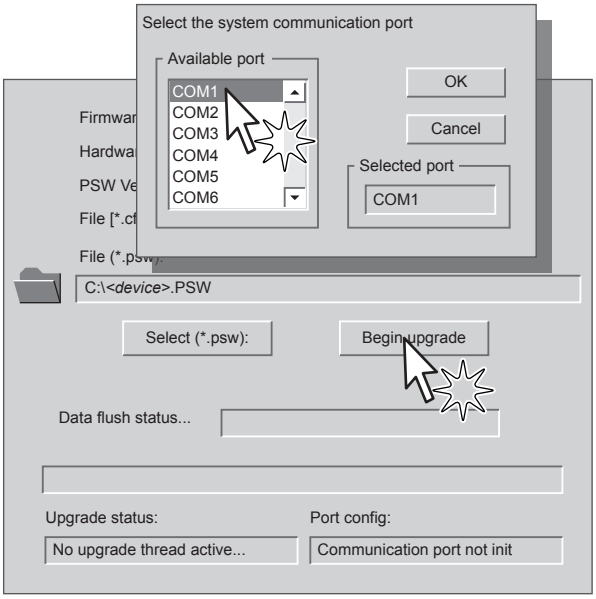

10. Detecting and setting of the parameters necessary for serial communication are performed automatically and then updating begins.
11. After a few minutes a message on the screen warns that the update is completed.

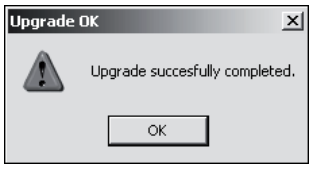

12. Print a new SETUP report to verify the new firmware release (see chapter 6).

Update via USB interface

ATTENTION:
Only during the firmware update, the connection between PC and device must be direct, without the use of HUB device.

Only during the firmware update, do not connect or disconnect other USB devices.

NOTE: For communication via USB you must install on PC the printer driver available in the download area of the web site www.custom.biz.

Proceed as follows:

1. Write down the product code (14 digits) printed on the product label (see paragraph 3.3).
2. Go to the web site www.custom.biz and download the appropriate firmware release from the DOWNLOAD area.
3. Print the SETUP report (see chapter 6).
4. Switch OFF the device.
5. Connect the device to the PC using a USB cable (see paragraph 4.3).
6. Switch ON the device.
7. Launch the software UPGCEPRN.
8. Select the update file .PSW location:

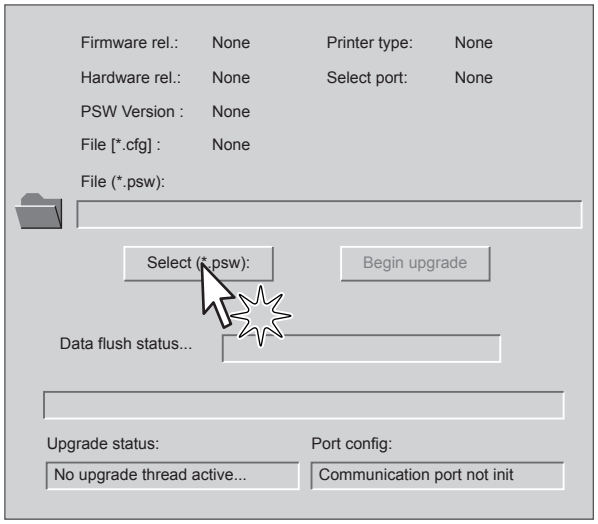

9. Select item USB and then select the USB device among those proposed (e.g. TG2480H):

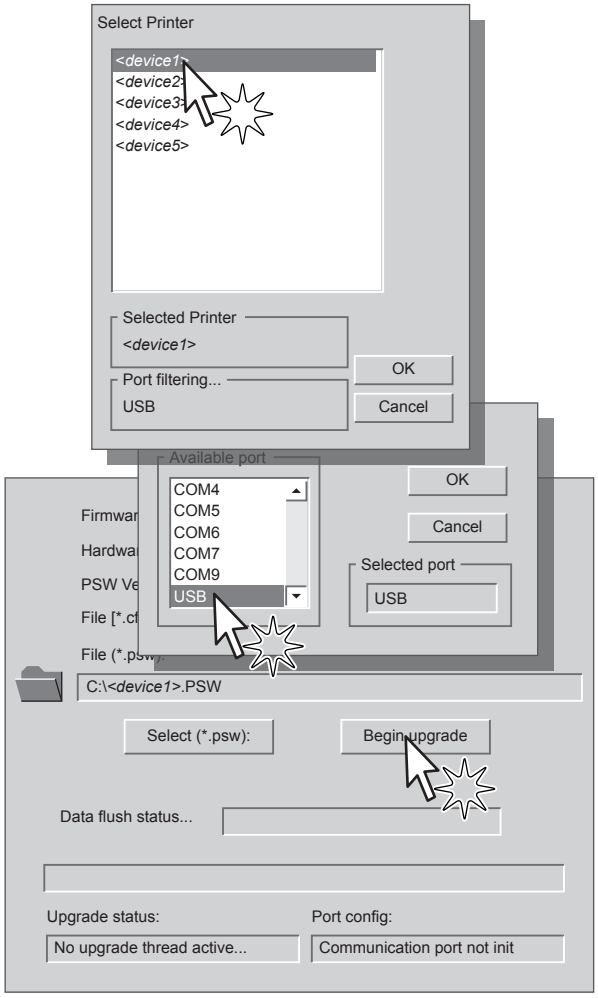

10. After a few minutes a message on the screen warns that the update is completed.

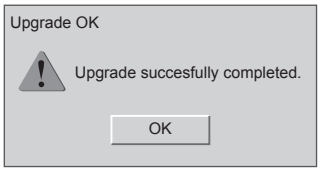

11. Print a new SETUP report to verify the new firmware release (see chapter 6).

8 SPECIFICATION

8.1 Hardware specifications

GENERAL	
Sensors	
TG2480H STD, TG2480H TKOUT	Paper presence in input, head temperature, paper jam, forced withdrawal of the ticket, external low paper (on paper roll holder)
TG2480H EJC	Paper presence in input, paper presence in output, head temperature, external low paper (on paper roll holder)
Emulations	CUSTOM/POS
Printing driver	Windows XP, Windows VISTA (32/64bit), Windows 7 (32/64bit), Windows 8 (32/64bit), Windows 2.1 (32/64bit), Windows 10 (32/64bit), Opos, Linux, Android
INTERFACES	
RS232 serial connector	from 1200 to 115200 bps
USB connector	12 Mbit/s
MEMORIES	
Receive buffer	2 Kbytes
Flash memory	1 Mbytes
Graphic memory	2 logos (608 x 430 dots)
PRINTER	
Resolution	203 dpi (8 dot/mm)
Printing method	Thermal, fixed head
Head life (1)	
Abrasion resistance (2)	100 Km (with recommended paper)
Pulse durability	100 M (12.5% duty cycle)
Printing width	52 mm, 56 mm, 60 mm, 64 mm, 68 mm, 72 mm, 76 mm, 80 mm

Printing mode	Normal, 180°
Printing format	Height/width from 1 to 4, bold, reverse, underlined, italic
Character fonts	
TG2480H STD	PC437, PC737, PC850, PC 852, PC 857, PC860, PC863, PC865, PC858, PC866, VISCII, U.D.P.
model with semplified chinese font (3)	PC437, PC850, PC860, PC863, PC865, PC858, GB2312
model with extended chinese font (3)	PC437, PC850, PC860, PC863, PC865, PC858, GB18030
Printable barcode	UPCA, UPCE, EAN13, EAN8, CODE39, ITF, CODABAR, CODE93, CODE128, CODE32, QRCODE
Printing speed (1) (5)	Normal = 100 mm/s High Speed = 130 mm/s
PAPER	
Type of paper	Thermal rolls, heat-sensitive side on outside of roll
Paper width	from 52 mm ± 0.5 mm to 80 mm ± 0.5 mm
Paper thickness	63 µm ± 0.5 µm (for 55 g/m^2 paper) 85 µm ± 0.6 µm (for 80 g/m^2 paper)
Paper weight	from 55 g/m^2 to 80 g/m^2
Recommended types of paper	*KANZAN KF50 or KP460, MITSUBISHI PG5075 or TL4000*
External roll diameter	max 90 mm
Paper end	Not attached to roll core
Internal roll core diameter	25 mm
Core type	Cardboard or plastic
Minimum ticket length	
TG2480H STD, TG2480H TKOUT	87 mm
TG2480H EJC	80 mm

CUTTER	
Paper cut	Total cut
Estimated life (1)	1 000 000 cutter number
DEVICE ELECTRICAL SPECIFICATIONS	
Power supply	24 Vdc ±10% (optional external power supply)
Medium consumption (4)	2.2 A
Typical consumption (5)	0.8 A
Stand-by consumption	0.05 A
ELECTRICAL SPECIFICATIONS POWER SUPPLY cod.963GE020000046 (OPTIONAL)	
Power supply voltage	from 100 Vac to 240 Vac
Frequency	from 50 Hz to 60 Hz
Output	24 V, 2.5 A
Power	60 W
ENVIRONMENTAL CONDITIONS	
Operating temperature	from -20°C to +70°C
Relative humidity	from 10% Rh to 85% Rh
Storage temperature	from -20 °C to +70 °C
Storage relative humidity	from 10% Rh to 90% Rh

NOTES:
(1) : Respecting the regular schedule of cleaning for the device components.
(2) : Damages caused by scratches, ESD and electromigration are excluded.
(3) : For further information, refer to the commands manual for the chinese font management.
(4) : Referred to the UL measurements (L = 10cm, Density = 50% dot on, Print density = +50%).
(5) : Referred to a standard CUSTOM receipt (L=10cm, Density = 12,5% dots on).

8.2 Character specifications

Character set		3	
Character density	11 cpi	15 cpi	20 cpi
Number of columns	35	45	64
Chars / sec	1540	1980	2773
Lines / sec	43	43	43
Characters (L x H mm)-Normal	2.2 x 3	1.7 x 3	1.2 x 3

NOTE: Theoretical values.

8.3 Device dimensions

Length	
TG2480H STD	271.5 mm
TG2480H EJC	260.2 mm
TG2480H TKOUT	255.4 mm
Height	102 mm
Width	130.2 mm
Weight	
TG2480H STD	1130 g
TG2480H EJC	1250 g
TG2480H TKOUT	1180 g

NOTES:
Data refer to device with paper roll holder assembled in the rear position (see paragraph 4.2).
All the dimensions shown in following figures are in millimetres.

TG2480H STD

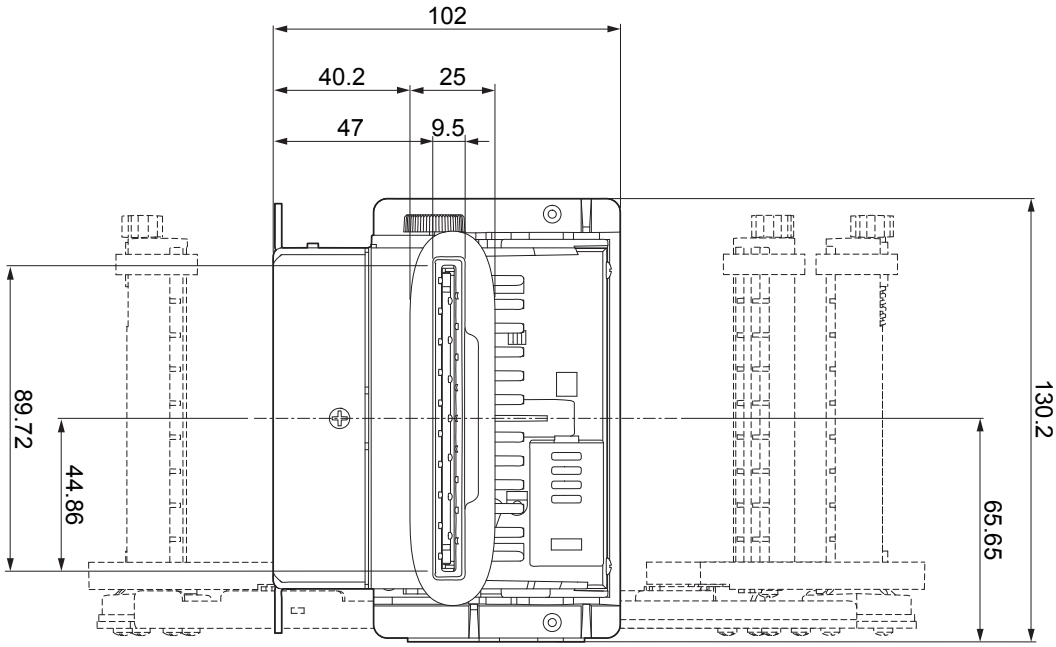
102
40.2
25
47
9.5
89.72
44.86
130.2
65.65

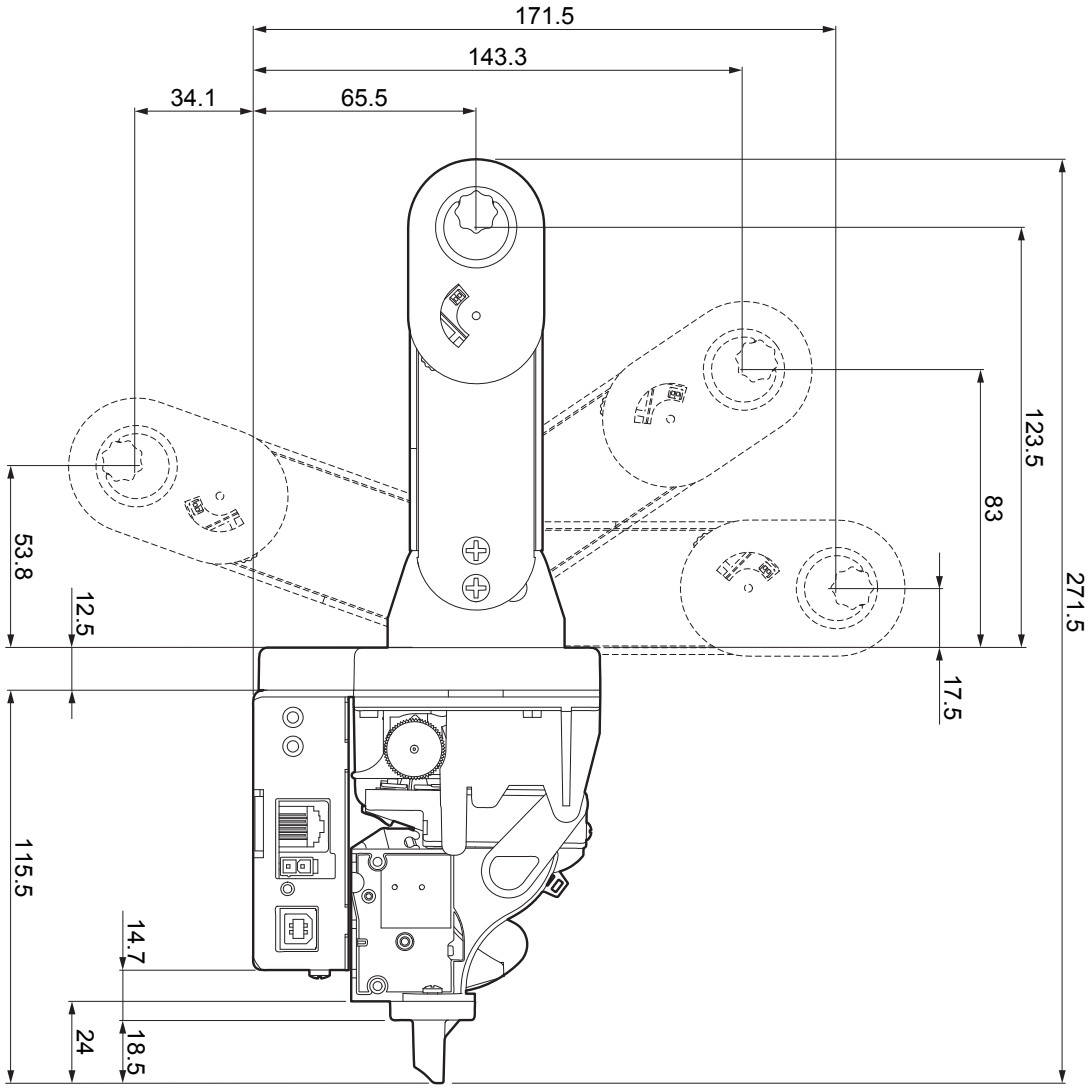
171.5
143.3
34.1
65.5
53.8
12.5
115.5
14.7
24
18.5
123.5
83
17.5
271.5

TG2480H EJC

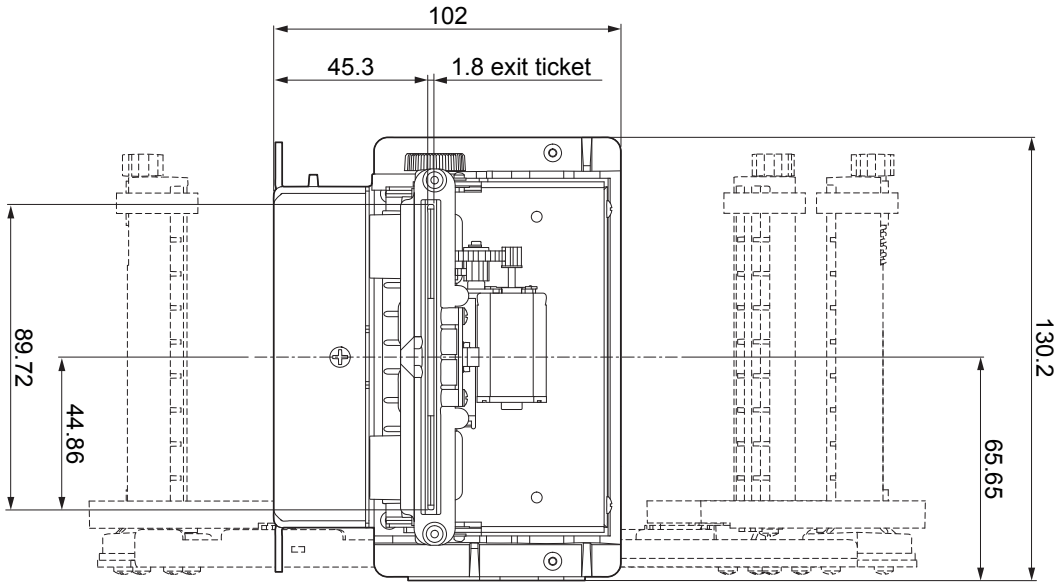
102
45.3
1.8 exit ticket
89.72
44.86
130.2
65.65

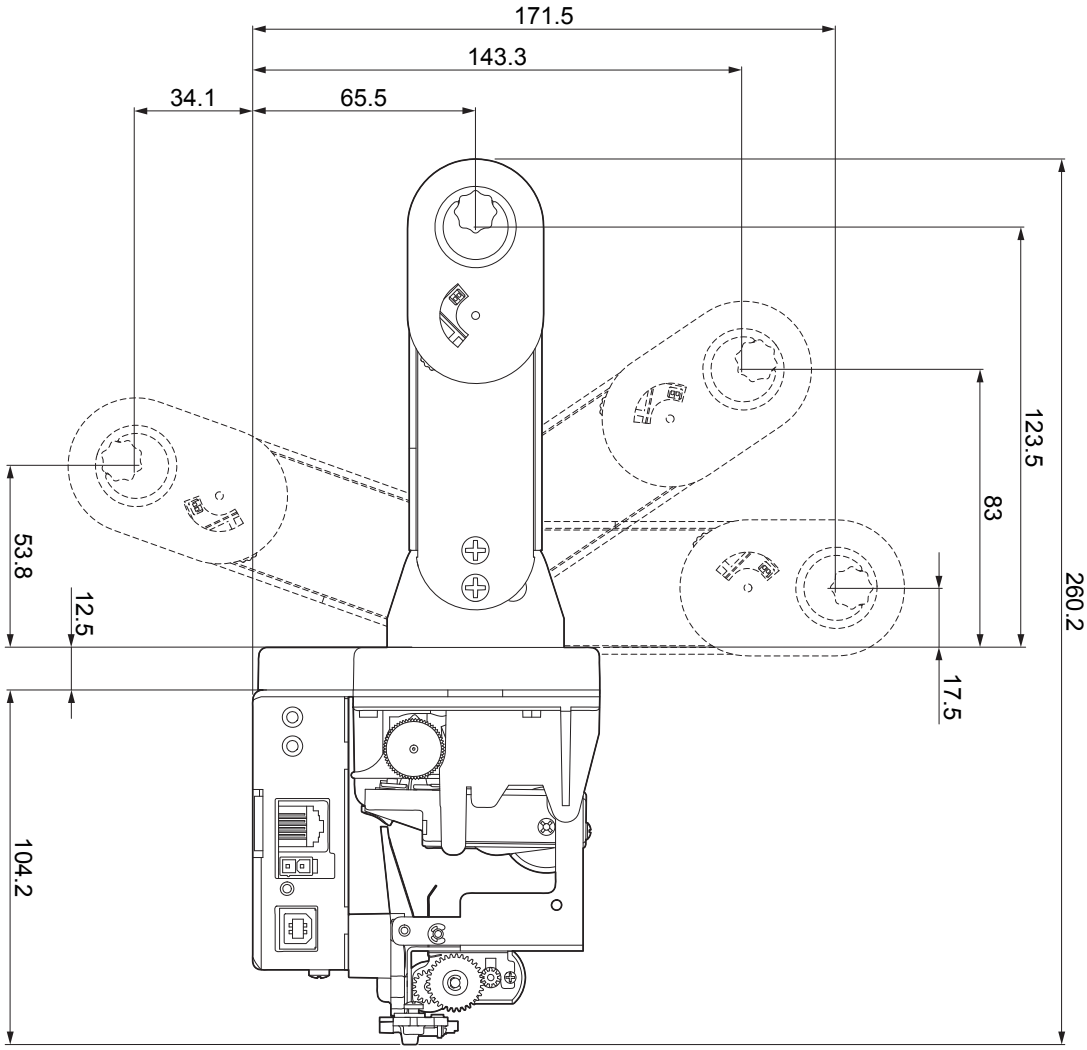
171.5
143.3
34.1
65.5
123.5
83
260.2
53.8
12.5
17.5
104.2

TG2480H TKOUT

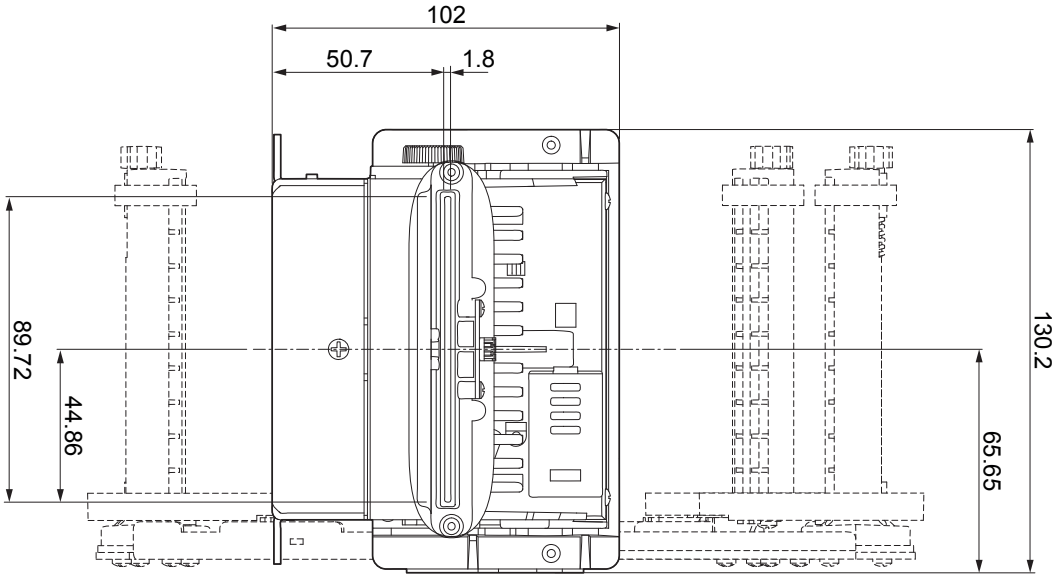

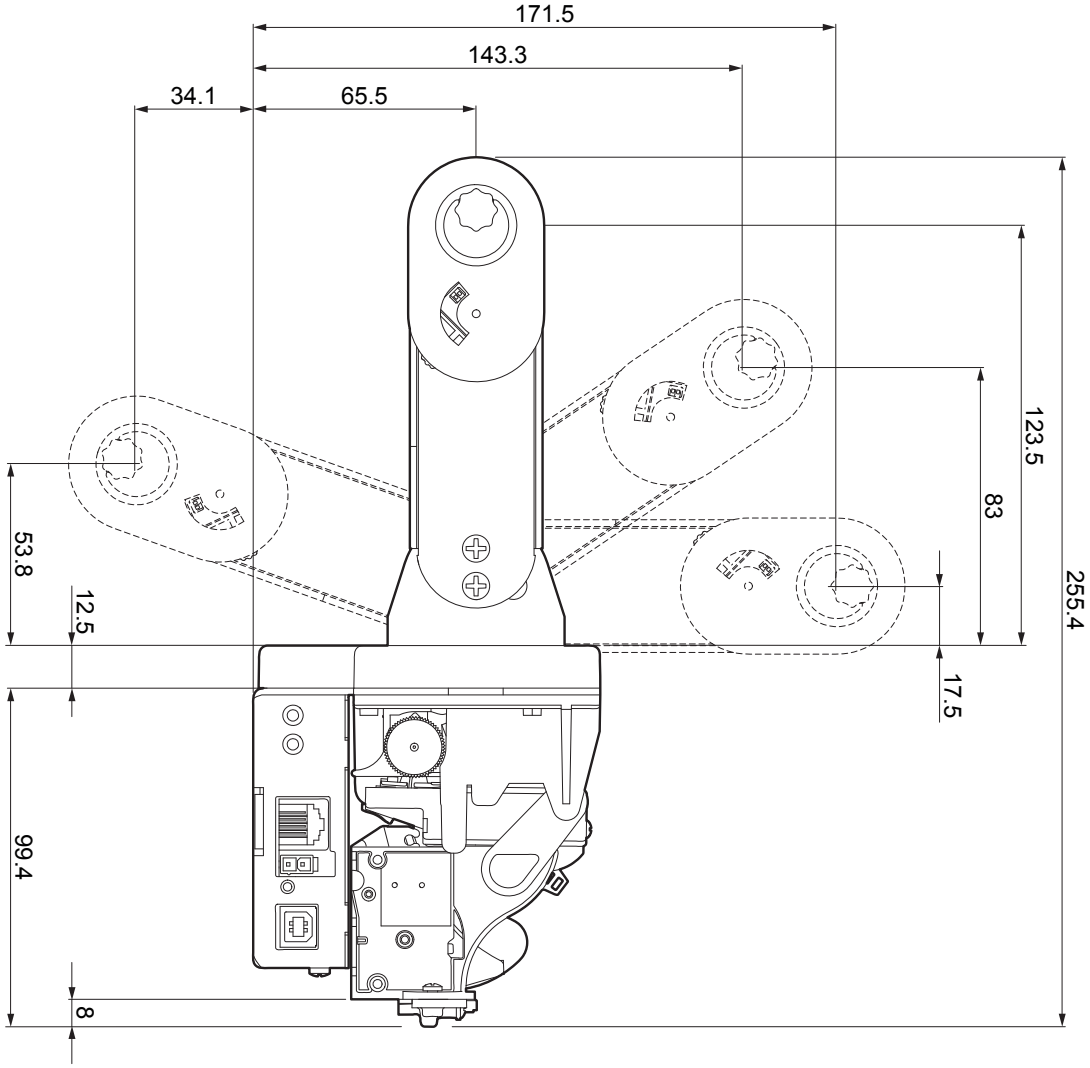

8.4 Power supply dimensions cod.963GE020000046 (optional)

Length	127 mm
Height	35,5 mm
Width	56 mm

NOTE:
All the dimensions shown in following figures are in millimetres

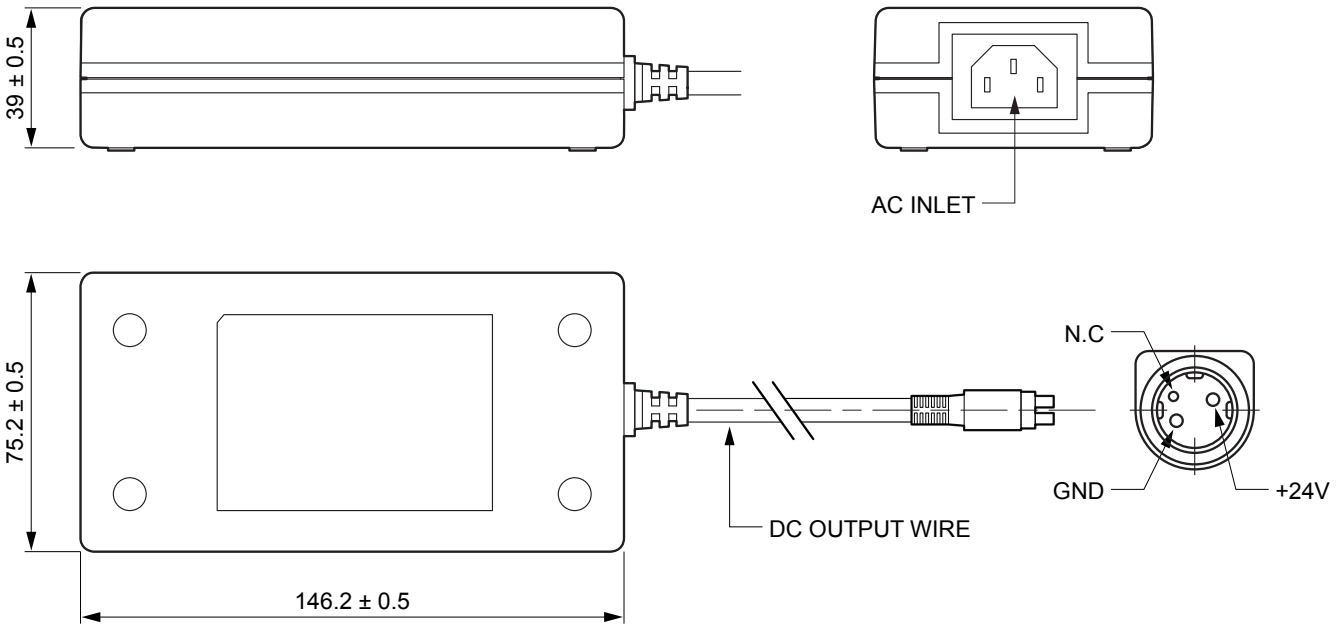

8.5 Paper specification

The following image shows an example of black mark placement on the non-thermal side of paper.

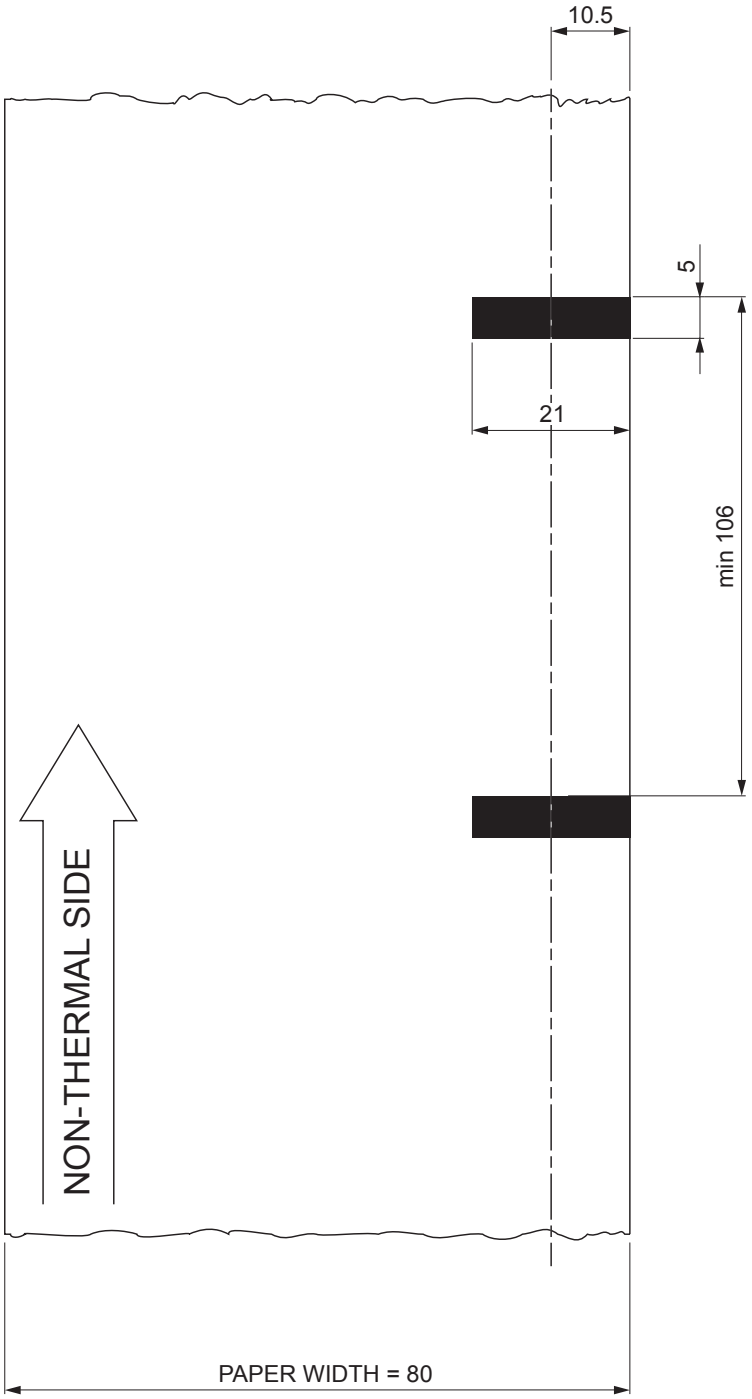

NOTE:
All the dimensions shown in following figures are in millimetres.

8.6 Character sets

The device has 3 fonts of varying width (11, 15 and 20 cpi) which may be accessed through programming or control characters.
Each of these fonts offers the following code tables: PC437, PC850, PC860, PC863, PC865, PC858, PC866, VISCII, U.D.P.

PC437 CODE TABLE (Usa, Standard Europe)

Char	SP	!	“	#	$	%	&	‘	(	)	*	+	,	-	.	/
Hex	0020	0021	0022	0023	0024	0025	0026	0027	0028	0029	002A	002B	002C	002D	002E	002F
Dec	32	33	34	35	36	37	38	39	40	41	42	43	44	45	46	47
Char	0	1	2	3	4	5	6	7	8	9	:	;	<	=	>	?
Hex	0030	0031	0032	0033	0034	0035	0036	0037	0038	0039	003A	003B	003C	003D	003E	003F
Dec	48	49	50	51	52	53	54	55	56	57	58	59	60	61	62	63
Char	@	A	B	C	D	E	F	G	H	I	J	K	L	M	N	O
Hex	0040	0041	0042	0043	0044	0045	0046	0047	0048	0049	004A	004B	004C	004D	004E	004F
Dec	64	65	66	67	68	69	70	71	72	73	74	75	76	77	78	79
Char	P	Q	R	S	T	U	V	W	X	Y	Z	[	\	]	^	_
Hex	0050	0051	0052	0053	0054	0055	0056	0057	0058	0059	005A	005B	005C	005D	005E	005F
Dec	80	81	82	83	84	85	86	87	88	89	90	91	92	93	94	95
Char	`	a	b	c	d	e	f	g	h	i	j	k	l	m	n	o
Hex	0060	0061	0062	0063	0064	0065	0066	0067	0068	0069	006A	006B	006C	006D	006E	006F
Dec	96	97	98	99	100	101	102	103	104	105	106	107	108	109	110	111
Char	p	q	r	s	t	u	v	w	x	y	z	{	|	}	~	⌂
Hex	0070	0071	0072	0073	0074	0075	0076	0077	0078	0079	007A	007B	007C	007D	007E	007F
Dec	112	113	114	115	116	117	118	119	120	121	122	123	124	125	126	127
Char	Ç	ü	é	â	ä	à	å	ç	ê	ë	è	ï	î	ì	Ä	Å
Hex	0080	0081	0082	0083	0084	0085	0086	0087	0088	0089	008A	008B	008C	008D	008E	008F
Dec	128	129	130	131	132	133	134	135	136	137	138	139	140	141	142	143
Char	É	æ	Æ	ô	ö	ò	û	ù	ÿ	Ö	Ü	¢	£	¥	Pts	ƒ
Hex	0090	0091	0092	0093	0094	0095	0096	0097	0098	0099	009A	009B	009C	009D	009E	009F
Dec	144	145	146	147	148	149	150	151	152	153	154	155	156	157	158	159
Char	á	í	ó	ú	ñ	Ñ	ª	º	¿	⌐	¬	½	¼	¡	«	»
Hex	00A0	00A1	00A2	00A3	00A4	00A5	00A6	00A7	00A8	00A9	00AA	00AB	00AC	00AD	00AE	00AF
Dec	160	161	162	163	164	165	166	167	168	169	170	171	172	173	174	175
Char	░	▒	▓	│	┤	╡	╢	╖	╕	╣	║	╗	╝	╜	╛	┐
Hex	00B0	00B1	00B2	00B3	00B4	00B5	00B6	00B7	00B8	00B9	00BA	00BB	00BC	00BD	00BE	00BF
Dec	176	177	178	179	180	181	182	183	184	185	186	187	188	189	190	191
Char	└	┴	┬	├	─	┼	╞	╟	╚	╔	╩	╦	╠	═	╬	╧
Hex	00C0	00C1	00C2	00C3	00C4	00C5	00C6	00C7	00C8	00C9	00CA	00CB	00CC	00CD	00CE	00CF
Dec	192	193	194	195	196	197	198	199	200	201	202	203	204	205	206	207
Char	╨	╤	╥	╙	╘	╒	╓	╫	╪	┘	┌	█	▄	▌	▐	▀
Hex	00D0	00D1	00D2	00D3	00D4	00D5	00D6	00D7	00D8	00D9	00DA	00DB	00DC	00DD	00DE	00DF
Dec	208	209	210	211	212	213	214	215	216	217	218	219	220	221	222	223
Char	α	ß	Γ	π	Σ	σ	µ	τ	Φ	Θ	Ω	δ	∞	φ	ε	∩
Hex	00E0	00E1	00E2	00E3	00E4	00E5	00E6	00E7	00E8	00E9	00EA	00EB	00EC	00ED	00EE	00EF
Dec	224	225	226	227	228	229	230	231	232	233	234	235	236	237	238	239
Char	≡	±	≥	≤	⌠	⌡	÷	≈	°	∙	·	√	ⁿ	²	■	NBSP
Hex	00F0	00F1	00F2	00F3	00F4	00F5	00F6	00F7	00F8	00F9	00FA	00FB	00FC	00FD	00FE	00FF
Dec	240	241	242	243	244	245	246	247	248	249	250	251	252	253	251	255

PC850 CODE TABLE (Multilingual)

Char	SP	!	“	#	$	%	&	‘	(	)	*	+	,	-	.	/
Hex	0020	0021	0022	0023	0024	0025	0026	0027	0028	0029	002A	002B	002C	002D	002E	002F
Dec	32	33	34	35	36	37	38	39	40	41	42	43	44	45	46	47
Char	0	1	2	3	4	5	6	7	8	9	:	;	<	=	>	?
Hex	0030	0031	0032	0033	0034	0035	0036	0037	0038	0039	003A	003B	003C	003D	003E	003F
Dec	48	49	50	51	52	53	54	55	56	57	58	59	60	61	62	63
Char	@	A	B	C	D	E	F	G	H	I	J	K	L	M	N	O
Hex	0040	0041	0042	0043	0044	0045	0046	0047	0048	0049	004A	004B	004C	004D	004E	004F
Dec	64	65	66	67	68	69	70	71	72	73	74	75	76	77	78	79
Char	P	Q	R	S	T	U	V	W	X	Y	Z	[	\	]	^	_
Hex	0050	0051	0052	0053	0054	0055	0056	0057	0058	0059	005A	005B	005C	005D	005E	005F
Dec	80	81	82	83	84	85	86	87	88	89	90	91	92	93	94	95
Char	`	a	b	c	d	e	f	g	h	i	j	k	l	m	n	o
Hex	0060	0061	0062	0063	0064	0065	0066	0067	0068	0069	006A	006B	006C	006D	006E	006F
Dec	96	97	98	99	100	101	102	103	104	105	106	107	108	109	110	111
Char	p	q	r	s	t	u	v	w	x	y	z	{	|	}	~	⌂
Hex	0070	0071	0072	0073	0074	0075	0076	0077	0078	0079	007A	007B	007C	007D	007E	007F
Dec	112	113	114	115	116	117	118	119	120	121	122	123	124	125	126	127
Char	Ç	ü	é	â	ä	à	å	ç	ê	ë	è	ï	î	ì	Ä	Å
Hex	0080	0081	0082	0083	0084	0085	0086	0087	0088	0089	008A	008B	008C	008D	008E	008F
Dec	128	129	130	131	132	133	134	135	136	137	138	139	140	141	142	143
Char	É	æ	Æ	ô	ö	ò	û	ù	ÿ	Ö	Ü	ø	£	Ø	×	ƒ
Hex	0090	0091	0092	0093	0094	0095	0096	0097	0098	0099	009A	009B	009C	009D	009E	009F
Dec	144	145	146	147	148	149	150	151	152	153	154	155	156	157	158	159
Char	á	í	ó	ú	ñ	Ñ	ª	º	¿	®	¬	½	¼	¡	«	»
Hex	00A0	00A1	00A2	00A3	00A4	00A5	00A6	00A7	00A8	00A9	00AA	00AB	00AC	00AD	00AE	00AF
Dec	160	161	162	163	164	165	166	167	168	169	170	171	172	173	174	175
Char	░	▒	▓	│	┤	Á	Â	À	©	╣	║	╗	╝	¢	¥	┐
Hex	00B0	00B1	00B2	00B3	00B4	00B5	00B6	00B7	00B8	00B9	00BA	00BB	00BC	00BD	00BE	00BF
Dec	176	177	178	179	180	181	182	183	184	185	186	187	188	189	190	191
Char	└	┴	┬	├	─	┼	ã	Ã	╚	╔	╩	╦	╠	═	╬	¤
Hex	00C0	00C1	00C2	00C3	00C4	00C5	00C6	00C7	00C8	00C9	00CA	00CB	00CC	00CD	00CE	00CF
Dec	192	193	194	195	196	197	198	199	200	201	202	203	204	205	206	207
Char	ð	Ð	Ê	Ë	È	ı	Í	Î	Ï	┘	┌	█	▄	¦	Ì	▀
Hex	00D0	00D1	00D2	00D3	00D4	00D5	00D6	00D7	00D8	00D9	00DA	00DB	00DC	00DD	00DE	00DF
Dec	208	209	210	211	212	213	214	215	216	217	218	219	220	221	222	223
Char	Ó	ß	Ô	Ò	õ	Õ	µ	þ	Þ	Ú	Û	Ù	ý	Ý	¯	´
Hex	00E0	00E1	00E2	00E3	00E4	00E5	00E6	00E7	00E8	00E9	00EA	00EB	00EC	00ED	00EE	00EF
Dec	224	225	226	227	228	229	230	231	232	233	234	235	236	237	238	239
Char	SHY	±	‗	¾	¶	§	÷	¸	°	¨	·	¹	³	²	■	NBSP
Hex	00F0	00F1	00F2	00F3	00F4	00F5	00F6	00F7	00F8	00F9	00FA	00FB	00FC	00FD	00FE	00FF
Dec	240	241	242	243	244	245	246	247	248	249	250	251	252	253	251	255

PC860 CODE TABLE (Portuguese)

Char	SP	!	“	#	$	%	&	‘	(	)	*	+	,	-	.	/
Hex	0020	0021	0022	0023	0024	0025	0026	0027	0028	0029	002A	002B	002C	002D	002E	002F
Dec	32	33	34	35	36	37	38	39	40	41	42	43	44	45	46	47
Char	0	1	2	3	4	5	6	7	8	9	:	;	<	=	>	?
Hex	0030	0031	0032	0033	0034	0035	0036	0037	0038	0039	003A	003B	003C	003D	003E	003F
Dec	48	49	50	51	52	53	54	55	56	57	58	59	60	61	62	63
Char	@	A	B	C	D	E	F	G	H	I	J	K	L	M	N	O
Hex	0040	0041	0042	0043	0044	0045	0046	0047	0048	0049	004A	004B	004C	004D	004E	004F
Dec	64	65	66	67	68	69	70	71	72	73	74	75	76	77	78	79
Char	P	Q	R	S	T	U	V	W	X	Y	Z	[	\	]	^	_
Hex	0050	0051	0052	0053	0054	0055	0056	0057	0058	0059	005A	005B	005C	005D	005E	005F
Dec	80	81	82	83	84	85	86	87	88	89	90	91	92	93	94	95
Char	`	a	b	c	d	e	f	g	h	i	j	k	l	m	n	o
Hex	0060	0061	0062	0063	0064	0065	0066	0067	0068	0069	006A	006B	006C	006D	006E	006F
Dec	96	97	98	99	100	101	102	103	104	105	106	107	108	109	110	111
Char	p	q	r	s	t	u	v	w	x	y	z	{	|	}	~	⌂
Hex	0070	0071	0072	0073	0074	0075	0076	0077	0078	0079	007A	007B	007C	007D	007E	007F
Dec	112	113	114	115	116	117	118	119	120	121	122	123	124	125	126	127
Char	Ç	ü	é	â	ã	à	Á	ç	ê	Ê	è	Í	Ô	ì	Ã	Â
Hex	0080	0081	0082	0083	0084	0085	0086	0087	0088	0089	008A	008B	008C	008D	008E	008F
Dec	128	129	130	131	132	133	134	135	136	137	138	139	140	141	142	143
Char	É	À	È	ô	ö	ò	Ú	ù	Ì	Õ	Ü	¢	£	Ù	Pts	Ó
Hex	0090	0091	0092	0093	0094	0095	0096	0097	0098	0099	009A	009B	009C	009D	009E	009F
Dec	144	145	146	147	148	149	150	151	152	153	154	155	156	157	158	159
Char	á	í	ó	ú	ñ	Ñ	ª	º	¿	Ò	¬	½	¼	¡	«	»
Hex	00A0	00A1	00A2	00A3	00A4	00A5	00A6	00A7	00A8	00A9	00AA	00AB	00AC	00AD	00AE	00AF
Dec	160	161	162	163	164	165	166	167	168	169	170	171	172	173	174	175
Char	░	▒	▓	│	┤	╡	╢	╖	╕	╣	║	╗	╝	╜	╛	┐
Hex	00B0	00B1	00B2	00B3	00B4	00B5	00B6	00B7	00B8	00B9	00BA	00BB	00BC	00BD	00BE	00BF
Dec	176	177	178	179	180	181	182	183	184	185	186	187	188	189	190	191
Char	└	┴	┬	├	─	┼	╞	╟	╚	╔	╩	╦	╠	═	╬	╧
Hex	00C0	00C1	00C2	00C3	00C4	00C5	00C6	00C7	00C8	00C9	00CA	00CB	00CC	00CD	00CE	00CF
Dec	192	193	194	195	196	197	198	199	200	201	202	203	204	205	206	207
Char	╨	╤	╥	╙	╘	╒	╓	╫	╪	┘	┌	█	▄	▌	▐	▀
Hex	00D0	00D1	00D2	00D3	00D4	00D5	00D6	00D7	00D8	00D9	00DA	00DB	00DC	00DD	00DE	00DF
Dec	208	209	210	211	212	213	214	215	216	217	218	219	220	221	222	223
Char	α	ß	Γ	π	Σ	σ	µ	τ	Φ	Θ	Ω	δ	∞	φ	ε	∩
Hex	00E0	00E1	00E2	00E3	00E4	00E5	00E6	00E7	00E8	00E9	00EA	00EB	00EC	00ED	00EE	00EF
Dec	224	225	226	227	228	229	230	231	232	233	234	235	236	237	238	239
Char	≡	±	≥	≤	⌠	⌡	÷	≈	°	∙	·	√	ⁿ	²	■	NBSP
Hex	00F0	00F1	00F2	00F3	00F4	00F5	00F6	00F7	00F8	00F9	00FA	00FB	00FC	00FD	00FE	00FF
Dec	240	241	242	243	244	245	246	247	248	249	250	251	252	253	251	255

PC863 CODE TABLE (Canadian, French)

Char	SP	!	“	#	$	%	&	‘	(	)	*	+	,	-	.	/
Hex	0020	0021	0022	0023	0024	0025	0026	0027	0028	0029	002A	002B	002C	002D	002E	002F
Dec	32	33	34	35	36	37	38	39	40	41	42	43	44	45	46	47
Char	0	1	2	3	4	5	6	7	8	9	:	;	<	=	>	?
Hex	0030	0031	0032	0033	0034	0035	0036	0037	0038	0039	003A	003B	003C	003D	003E	003F
Dec	48	49	50	51	52	53	54	55	56	57	58	59	60	61	62	63
Char	@	A	B	C	D	E	F	G	H	I	J	K	L	M	N	O
Hex	0040	0041	0042	0043	0044	0045	0046	0047	0048	0049	004A	004B	004C	004D	004E	004F
Dec	64	65	66	67	68	69	70	71	72	73	74	75	76	77	78	79
Char	P	Q	R	S	T	U	V	W	X	Y	Z	[	\	]	^	_
Hex	0050	0051	0052	0053	0054	0055	0056	0057	0058	0059	005A	005B	005C	005D	005E	005F
Dec	80	81	82	83	84	85	86	87	88	89	90	91	92	93	94	95
Char	`	a	b	c	d	e	f	g	h	i	j	k	l	m	n	o
Hex	0060	0061	0062	0063	0064	0065	0066	0067	0068	0069	006A	006B	006C	006D	006E	006F
Dec	96	97	98	99	100	101	102	103	104	105	106	107	108	109	110	111
Char	p	q	r	s	t	u	v	w	x	y	z	{	|	}	~	⌂
Hex	0070	0071	0072	0073	0074	0075	0076	0077	0078	0079	007A	007B	007C	007D	007E	007F
Dec	112	113	114	115	116	117	118	119	120	121	122	123	124	125	126	127
Char	Ç	ü	é	â	Â	à	¶	ç	ê	ë	è	ï	î	‗	À	§
Hex	0080	0081	0082	0083	0084	0085	0086	0087	0088	0089	008A	008B	008C	008D	008E	008F
Dec	128	129	130	131	132	133	134	135	136	137	138	139	140	141	142	143
Char	É	È	Ê	ô	Ë	Ï	û	ù	¤	Ô	Ü	¢	£	Ù	Û	ƒ
Hex	0090	0091	0092	0093	0094	0095	0096	0097	0098	0099	009A	009B	009C	009D	009E	009F
Dec	144	145	146	147	148	149	150	151	152	153	154	155	156	157	158	159
Char	¦	´	ó	ú	¨	¸	³	¯	Î	⌐	¬	½	¼	¾	«	»
Hex	00A0	00A1	00A2	00A3	00A4	00A5	00A6	00A7	00A8	00A9	00AA	00AB	00AC	00AD	00AE	00AF
Dec	160	161	162	163	164	165	166	167	168	169	170	171	172	173	174	175
Char	░	▒	▓	│	┤	╡	╢	╖	╕	╣	║	╗	╝	╜	╛	┐
Hex	00B0	00B1	00B2	00B3	00B4	00B5	00B6	00B7	00B8	00B9	00BA	00BB	00BC	00BD	00BE	00BF
Dec	176	177	178	179	180	181	182	183	184	185	186	187	188	189	190	191
Char	└	┴	┬	├	─	┼	╞	╟	╚	╔	╩	╦	╠	═	╬	╧
Hex	00C0	00C1	00C2	00C3	00C4	00C5	00C6	00C7	00C8	00C9	00CA	00CB	00CC	00CD	00CE	00CF
Dec	192	193	194	195	196	197	198	199	200	201	202	203	204	205	206	207
Char	╨	╤	╥	╙	╘	╒	╓	╫	╪	┘	┌	█	▄	▌	▐	▀
Hex	00D0	00D1	00D2	00D3	00D4	00D5	00D6	00D7	00D8	00D9	00DA	00DB	00DC	00DD	00DE	00DF
Dec	208	209	210	211	212	213	214	215	216	217	218	219	220	221	222	223
Char	α	ß	Γ	π	Σ	σ	µ	τ	Φ	Θ	Ω	δ	∞	φ	ε	∩
Hex	00E0	00E1	00E2	00E3	00E4	00E5	00E6	00E7	00E8	00E9	00EA	00EB	00EC	00ED	00EE	00EF
Dec	224	225	226	227	228	229	230	231	232	233	234	235	236	237	238	239
Char	≡	±	≥	≤	⌠	⌡	÷	≈	°	∙	·	√	ⁿ	²	■	NBSP
Hex	00F0	00F1	00F2	00F3	00F4	00F5	00F6	00F7	00F8	00F9	00FA	00FB	00FC	00FD	00FE	00FF
Dec	240	241	242	243	244	245	246	247	248	249	250	251	252	253	251	255

PC865 CODE TABLE (Nordic)

Char	SP	!	“	#	$	%	&	‘	(	)	*	+	,	-	.	/
Hex	0020	0021	0022	0023	0024	0025	0026	0027	0028	0029	002A	002B	002C	002D	002E	002F
Dec	32	33	34	35	36	37	38	39	40	41	42	43	44	45	46	47
Char	0	1	2	3	4	5	6	7	8	9	:	;	<	=	>	?
Hex	0030	0031	0032	0033	0034	0035	0036	0037	0038	0039	003A	003B	003C	003D	003E	003F
Dec	48	49	50	51	52	53	54	55	56	57	58	59	60	61	62	63
Char	@	A	B	C	D	E	F	G	H	I	J	K	L	M	N	O
Hex	0040	0041	0042	0043	0044	0045	0046	0047	0048	0049	004A	004B	004C	004D	004E	004F
Dec	64	65	66	67	68	69	70	71	72	73	74	75	76	77	78	79
Char	P	Q	R	S	T	U	V	W	X	Y	Z	[	\	]	^	_
Hex	0050	0051	0052	0053	0054	0055	0056	0057	0058	0059	005A	005B	005C	005D	005E	005F
Dec	80	81	82	83	84	85	86	87	88	89	90	91	92	93	94	95
Char	`	a	b	c	d	e	f	g	h	i	j	k	l	m	n	o
Hex	0060	0061	0062	0063	0064	0065	0066	0067	0068	0069	006A	006B	006C	006D	006E	006F
Dec	96	97	98	99	100	101	102	103	104	105	106	107	108	109	110	111
Char	p	q	r	s	t	u	v	w	x	y	z	{	|	}	~	⌂
Hex	0070	0071	0072	0073	0074	0075	0076	0077	0078	0079	007A	007B	007C	007D	007E	007F
Dec	112	113	114	115	116	117	118	119	120	121	122	123	124	125	126	127
Char	Ç	ü	é	â	ä	à	å	ç	ê	ë	è	ï	î	ì	Ä	Å
Hex	0080	0081	0082	0083	0084	0085	0086	0087	0088	0089	008A	008B	008C	008D	008E	008F
Dec	128	129	130	131	132	133	134	135	136	137	138	139	140	141	142	143
Char	É	æ	Æ	ô	ö	ò	û	ù	ÿ	Ö	Ü	ø	£	Ø	Pts	ƒ
Hex	0090	0091	0092	0093	0094	0095	0096	0097	0098	0099	009A	009B	009C	009D	009E	009F
Dec	144	145	146	147	148	149	150	151	152	153	154	155	156	157	158	159
Char	á	í	ó	ú	ñ	Ñ	ª	º	¿	⌐	¬	½	¼	¡	«	¤
Hex	00A0	00A1	00A2	00A3	00A4	00A5	00A6	00A7	00A8	00A9	00AA	00AB	00AC	00AD	00AE	00AF
Dec	160	161	162	163	164	165	166	167	168	169	170	171	172	173	174	175
Char	░	▒	▓	│	┤	╡	╢	╖	╕	╣	║	╗	╝	╜	╛	┐
Hex	00B0	00B1	00B2	00B3	00B4	00B5	00B6	00B7	00B8	00B9	00BA	00BB	00BC	00BD	00BE	00BF
Dec	176	177	178	179	180	181	182	183	184	185	186	187	188	189	190	191
Char	└	┴	┬	├	─	┼	╞	╟	╚	╔	╩	╦	╠	═	╬	╧
Hex	00C0	00C1	00C2	00C3	00C4	00C5	00C6	00C7	00C8	00C9	00CA	00CB	00CC	00CD	00CE	00CF
Dec	192	193	194	195	196	197	198	199	200	201	202	203	204	205	206	207
Char	╨	╤	╥	╙	╘	╒	╓	╫	╪	┘	┌	█	▄	▌	▐	▀
Hex	00D0	00D1	00D2	00D3	00D4	00D5	00D6	00D7	00D8	00D9	00DA	00DB	00DC	00DD	00DE	00DF
Dec	208	209	210	211	212	213	214	215	216	217	218	219	220	221	222	223
Char	α	ß	Γ	π	Σ	σ	µ	τ	Φ	Θ	Ω	δ	∞	φ	ε	∩
Hex	00E0	00E1	00E2	00E3	00E4	00E5	00E6	00E7	00E8	00E9	00EA	00EB	00EC	00ED	00EE	00EF
Dec	224	225	226	227	228	229	230	231	232	233	234	235	236	237	238	239
Char	≡	±	≥	≤	⌠	⌡	÷	≈	°	∙	·	√	ⁿ	²	■	NBSP
Hex	00F0	00F1	00F2	00F3	00F4	00F5	00F6	00F7	00F8	00F9	00FA	00FB	00FC	00FD	00FE	00FF
Dec	240	241	242	243	244	245	246	247	248	249	250	251	252	253	251	255

PC858 CODE TABLE (Euro symbol)

Char	SP	!	“	#	$	%	&	‘	(	)	*	+	,	-	.	/
Hex	0020	0021	0022	0023	0024	0025	0026	0027	0028	0029	002A	002B	002C	002D	002E	002F
Dec	32	33	34	35	36	37	38	39	40	41	42	43	44	45	46	47
Char	0	1	2	3	4	5	6	7	8	9	:	;	<	=	>	?
Hex	0030	0031	0032	0033	0034	0035	0036	0037	0038	0039	003A	003B	003C	003D	003E	003F
Dec	48	49	50	51	52	53	54	55	56	57	58	59	60	61	62	63
Char	@	A	B	C	D	E	F	G	H	I	J	K	L	M	N	O
Hex	0040	0041	0042	0043	0044	0045	0046	0047	0048	0049	004A	004B	004C	004D	004E	004F
Dec	64	65	66	67	68	69	70	71	72	73	74	75	76	77	78	79
Char	P	Q	R	S	T	U	V	W	X	Y	Z	[	\	]	^	_
Hex	0050	0051	0052	0053	0054	0055	0056	0057	0058	0059	005A	005B	005C	005D	005E	005F
Dec	80	81	82	83	84	85	86	87	88	89	90	91	92	93	94	95
Char	`	a	b	c	d	e	f	g	h	i	j	k	l	m	n	o
Hex	0060	0061	0062	0063	0064	0065	0066	0067	0068	0069	006A	006B	006C	006D	006E	006F
Dec	96	97	98	99	100	101	102	103	104	105	106	107	108	109	110	111
Char	p	q	r	s	t	u	v	w	x	y	z	{	|	}	~	⌂
Hex	0070	0071	0072	0073	0074	0075	0076	0077	0078	0079	007A	007B	007C	007D	007E	007F
Dec	112	113	114	115	116	117	118	119	120	121	122	123	124	125	126	127
Char	Ç	ü	é	â	ä	à	å	ç	ê	ë	è	ï	î	ì	Ä	Å
Hex	0080	0081	0082	0083	0084	0085	0086	0087	0088	0089	008A	008B	008C	008D	008E	008F
Dec	128	129	130	131	132	133	134	135	136	137	138	139	140	141	142	143
Char	É	æ	Æ	ô	ö	ò	û	ù	ÿ	Ö	Ü	ø	£	Ø	×	ƒ
Hex	0090	0091	0092	0093	0094	0095	0096	0097	0098	0099	009A	009B	009C	009D	009E	009F
Dec	144	145	146	147	148	149	150	151	152	153	154	155	156	157	158	159
Char	á	í	ó	ú	ñ	Ñ	ª	º	¿	®	¬	½	¼	¡	«	»
Hex	00A0	00A1	00A2	00A3	00A4	00A5	00A6	00A7	00A8	00A9	00AA	00AB	00AC	00AD	00AE	00AF
Dec	160	161	162	163	164	165	166	167	168	169	170	171	172	173	174	175
Char	░	▒	▓	│	┤	Á	Â	À	©	╣	║	╗	╝	¢	¥	┐
Hex	00B0	00B1	00B2	00B3	00B4	00B5	00B6	00B7	00B8	00B9	00BA	00BB	00BC	00BD	00BE	00BF
Dec	176	177	178	179	180	181	182	183	184	185	186	187	188	189	190	191
Char	└	┴	┬	├	─	┼	ã	Ã	╚	╔	╩	╦	╠	═	╬	¤
Hex	00C0	00C1	00C2	00C3	00C4	00C5	00C6	00C7	00C8	00C9	00CA	00CB	00CC	00CD	00CE	00CF
Dec	192	193	194	195	196	197	198	199	200	201	202	203	204	205	206	207
Char	ð	Ð	Ê	Ë	È	€	Í	Î	Ï	┘	┌	█	▄	¦	Ì	▀
Hex	00D0	00D1	00D2	00D3	00D4	00D5	00D6	00D7	00D8	00D9	00DA	00DB	00DC	00DD	00DE	00DF
Dec	208	209	210	211	212	213	214	215	216	217	218	219	220	221	222	223
Char	Ó	ß	Ô	Ò	õ	Õ	µ	þ	Þ	Ú	Û	Ù	ý	Ý	¯	´
Hex	00E0	00E1	00E2	00E3	00E4	00E5	00E6	00E7	00E8	00E9	00EA	00EB	00EC	00ED	00EE	00EF
Dec	224	225	226	227	228	229	230	231	232	233	234	235	236	237	238	239
Char	SHY	±	‗	¾	¶	§	÷	¸	°	¨	·	¹	³	²	■	NBSP
Hex	00F0	00F1	00F2	00F3	00F4	00F5	00F6	00F7	00F8	00F9	00FA	00FB	00FC	00FD	00FE	00FF
Dec	240	241	242	243	244	245	246	247	248	249	250	251	252	253	251	255

NOTA:
To print the Euro (€) symbol, the command sequence is: 0x1B 0x74 0x13 0xD5 (see Commands Manual).

PC866 CODE TABLE (Cyrillic)

Char	SP	!	“	#	$	%	&	‘	(	)	*	+	,	-	.	/
Hex	0020	0021	0022	0023	0024	0025	0026	0027	0028	0029	002A	002B	002C	002D	002E	002F
Dec	32	33	34	35	36	37	38	39	40	41	42	43	44	45	46	47
Char	0	1	2	3	4	5	6	7	8	9	:	;	<	=	>	?
Hex	0030	0031	0032	0033	0034	0035	0036	0037	0038	0039	003A	003B	003C	003D	003E	003F
Dec	48	49	50	51	52	53	54	55	56	57	58	59	60	61	62	63
Char	@	A	B	C	D	E	F	G	H	I	J	K	L	M	N	O
Hex	0040	0041	0042	0043	0044	0045	0046	0047	0048	0049	004A	004B	004C	004D	004E	004F
Dec	64	65	66	67	68	69	70	71	72	73	74	75	76	77	78	79
Char	P	Q	R	S	T	U	V	W	X	Y	Z	[	\	]	^	_
Hex	0050	0051	0052	0053	0054	0055	0056	0057	0058	0059	005A	005B	005C	005D	005E	005F
Dec	80	81	82	83	84	85	86	87	88	89	90	91	92	93	94	95
Char	`	a	b	c	d	e	f	g	h	i	j	k	l	m	n	o
Hex	0060	0061	0062	0063	0064	0065	0066	0067	0068	0069	006A	006B	006C	006D	006E	006F
Dec	96	97	98	99	100	101	102	103	104	105	106	107	108	109	110	111
Char	p	q	r	s	t	u	v	w	x	y	z	{	|	}	~	⌂
Hex	0070	0071	0072	0073	0074	0075	0076	0077	0078	0079	007A	007B	007C	007D	007E	007F
Dec	112	113	114	115	116	117	118	119	120	121	122	123	124	125	126	127
Char	А	Б	В	Г	Д	Е	Ж	З	И	Й	К	Л	М	Н	О	П
Hex	0080	0081	0082	0083	0084	0085	0086	0087	0088	0089	008A	008B	008C	008D	008E	008F
Dec	128	129	130	131	132	133	134	135	136	137	138	139	140	141	142	143
Char	Р	С	Т	У	Ф	Х	Ц	Ч	Ш	Щ	Ъ	Ы	Ь	Э	Ю	Я
Hex	0090	0091	0092	0093	0094	0095	0096	0097	0098	0099	009A	009B	009C	009D	009E	009F
Dec	144	145	146	147	148	149	150	151	152	153	154	155	156	157	158	159
Char	а	б	в	г	д	е	ж	з	и	й	к	л	м	н	о	п
Hex	00A0	00A1	00A2	00A3	00A4	00A5	00A6	00A7	00A8	00A9	00AA	00AB	00AC	00AD	00AE	00AF
Dec	160	161	162	163	164	165	166	167	168	169	170	171	172	173	174	175
Char	░	▒	▓	│	┤	╡	╢	╖	╕	╣	║	╗	╝	╜	╛	┐
Hex	00B0	00B1	00B2	00B3	00B4	00B5	00B6	00B7	00B8	00B9	00BA	00BB	00BC	00BD	00BE	00BF
Dec	176	177	178	179	180	181	182	183	184	185	186	187	188	189	190	191
Char	└	┴	┬	├	─	┼	╞	╟	╚	╔	╩	╦	╠	═	╬	╧
Hex	00C0	00C1	00C2	00C3	00C4	00C5	00C6	00C7	00C8	00C9	00CA	00CB	00CC	00CD	00CE	00CF
Dec	192	193	194	195	196	197	198	199	200	201	202	203	204	205	206	207
Char	╨	╤	╥	╙	╘	╒	╓	╫	╪	┘	┌	█	▄	▌	▐	▀
Hex	00D0	00D1	00D2	00D3	00D4	00D5	00D6	00D7	00D8	00D9	00DA	00DB	00DC	00DD	00DE	00DF
Dec	208	209	210	211	212	213	214	215	216	217	218	219	220	221	222	223
Char	р	с	т	у	ф	х	ц	ч	ш	щ	ъ	ы	ь	э	ю	я
Hex	00E0	00E1	00E2	00E3	00E4	00E5	00E6	00E7	00E8	00E9	00EA	00EB	00EC	00ED	00EE	00EF
Dec	224	225	226	227	228	229	230	231	232	233	234	235	236	237	238	239
Char	Ё	ё	Є	є	Ї	ї	Ў	ў	°	·	·	√	№	¤	■	NBSP
Hex	00F0	00F1	00F2	00F3	00F4	00F5	00F6	00F7	00F8	00F9	00FA	00FB	00FC	00FD	00FE	00FF
Dec	240	241	242	243	244	245	246	247	248	249	250	251	252	253	251	255

VISCII CODE TABLE (Vietnamense standard code)

Char	NUL	SOH	Ằ	ETX	EOT	Ẵ	Ẫ	BEL	BS	HT	LF	VT	FF	CR	SO	SI
Hex	0000	0001	0002	0003	0004	0005	0006	0007	0008	0009	000A	000B	000C	000D	000E	000F
Dec	0	1	2	3	4	5	6	7	8	9	10	11	12	13	14	15
Char	DLE	DC1	DC2	DC3	Ỷ	NAK	SYN	ETB	CAN	Ỹ	SUB	ESC	FS	GS	Ỵ	US
Hex	0010	0011	0012	0013	0014	0015	0016	0017	0018	0019	001A	001B	001C	001D	001E	001F
Dec	16	17	18	19	20	21	22	23	24	25	26	27	28	29	30	31
Char	SP	!	“	#	$	%	&	‘	(	)	*	+	,	-	.	/
Hex	0020	0021	0022	0023	0024	0025	0026	0027	0028	0029	002A	002B	002C	002D	002E	002F
Dec	32	33	34	35	36	37	38	39	40	41	42	43	44	45	46	47
Char	0	1	2	3	4	5	6	7	8	9	:	;	<	=	>	?
Hex	0030	0031	0032	0033	0034	0035	0036	0037	0038	0039	003A	003B	003C	003D	003E	003F
Dec	48	49	50	51	52	53	54	55	56	57	58	59	60	61	62	63
Char	@	A	B	C	D	E	F	G	H	I	J	K	L	M	N	O
Hex	0040	0041	0042	0043	0044	0045	0046	0047	0048	0049	004A	004B	004C	004D	004E	004F
Dec	64	65	66	67	68	69	70	71	72	73	74	75	76	77	78	79
Char	P	Q	R	S	T	U	V	W	X	Y	Z	[	\	]	^	_
Hex	0050	0051	0052	0053	0054	0055	0056	0057	0058	0059	005A	005B	005C	005D	005E	005F
Dec	80	81	82	83	84	85	86	87	88	89	90	91	92	93	94	95
Char	`	a	b	c	d	e	f	g	h	i	j	k	l	m	n	o
Hex	0060	0061	0062	0063	0064	0065	0066	0067	0068	0069	006A	006B	006C	006D	006E	006F
Dec	96	97	98	99	100	101	102	103	104	105	106	107	108	109	110	111
Char	p	q	r	s	t	u	v	w	x	y	z	{	|	}	~	DEL
Hex	0070	0071	0072	0073	0074	0075	0076	0077	0078	0079	007A	007B	007C	007D	007E	007F
Dec	112	113	114	115	116	117	118	119	120	121	122	123	124	125	126	127
Char	Ạ	Ắ	Ằ	Ặ	Ấ	Ầ	Ẩ	Ậ	Ẽ	Ẹ	Ế	Ề	Ể	Ễ	Ệ	Ố
Hex	0080	0081	0082	0083	0084	0085	0086	0087	0088	0089	008A	008B	008C	008D	008E	008F
Dec	128	129	130	131	132	133	134	135	136	137	138	139	140	141	142	143
Char	Ồ	Ổ	Ỗ	Ộ	Ợ	Ớ	Ờ	Ở	Ị	Ỏ	Ọ	Ỉ	Ủ	Ũ	Ụ	Ỳ
Hex	0090	0091	0092	0093	0094	0095	0096	0097	0098	0099	009A	009B	009C	009D	009E	009F
Dec	144	145	146	147	148	149	150	151	152	153	154	155	156	157	158	159
Char	Õ	ắ	ằ	ặ	ấ	ầ	ẩ	ậ	ẽ	ẹ	ế	ề	ể	ễ	ệ	ố
Hex	00A0	00A1	00A2	00A3	00A4	00A5	00A6	00A7	00A8	00A9	00AA	00AB	00AC	00AD	00AE	00AF
Dec	160	161	162	163	164	165	166	167	168	169	170	171	172	173	174	175
Char	ồ	ổ	ỗ	Ỡ	Ơ	ộ	ờ	ở	ị	Ự	Ứ	Ừ	Ử	ơ	ớ	Ư
Hex	00B0	00B1	00B2	00B3	00B4	00B5	00B6	00B7	00B8	00B9	00BA	00BB	00BC	00BD	00BE	00BF
Dec	176	177	178	179	180	181	182	183	184	185	186	187	188	189	190	191
Char	À	Á	Â	Ã	Ả	Ă	ẳ	ẵ	È	É	Ê	Ẻ	Ì	Í	Ĩ	ỳ
Hex	00C0	00C1	00C2	00C3	00C4	00C5	00C6	00C7	00C8	00C9	00CA	00CB	00CC	00CD	00CE	00CF
Dec	192	193	194	195	196	197	198	199	200	201	202	203	204	205	206	207
Char	Đ	ứ	Ò	Ó	Ô	ạ	ỷ	ừ	ử	Ù	Ú	ỹ	ỵ	Ý	ỡ	ư
Hex	00D0	00D1	00D2	00D3	00D4	00D5	00D6	00D7	00D8	00D9	00DA	00DB	00DC	00DD	00DE	00DF
Dec	208	209	210	211	212	213	214	215	216	217	218	219	220	221	222	223
Char	à	á	â	ã	ả	ă	ữ	ẫ	è	é	ê	ẻ	ì	í	ĩ	ỉ
Hex	00E0	00E1	00E2	00E3	00E4	00E5	00E6	00E7	00E8	00E9	00EA	00EB	00EC	00ED	00EE	00EF
Dec	224	225	226	227	228	229	230	231	232	233	234	235	236	237	238	239
Char	đ	ự	ò	ó	ô	õ	ỏ	ọ	ụ	ù	ú	ũ	ủ	ý	ợ	ỮỮ
Hex	00F0	00F1	00F2	00F3	00F4	00F5	00F6	00F7	00F8	00F9	00FA	00FB	00FC	00FD	00FE	00FF
Dec	240	241	242	243	244	245	246	247	248	249	250	251	252	253	251	255

9 CONSUMABLES

The following table shows the list of available consumables for device:

DESCRIPTION	CODE
THERMAL PAPER ROLL width = 80mm Ø external = 90mm Ø core = 25mm	**67300000000406** 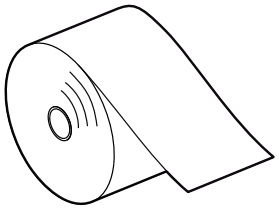

10 ACCESSORIES

The following table shows the list of available accessories for device:

DESCRIPTION	CODE
POWER SUPPLY (for technical specifications, see paragraph 8.1)	**963GE020000046** 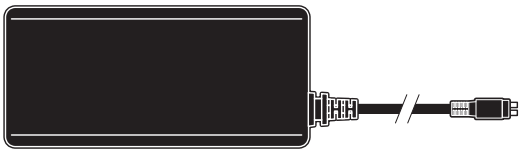
ADAPTER CABLE FOR POWER SUPPLY (see paragraph 10.1)	**26900000000005**
USB CABLE TYPE A-B Length = 1.8 m	**26500000000356**
SERIAL CABLE RJ-DB9F Length = 1.5 m	**26500000000311**

10.1 Adapter cable for power supplys

For the device is available an adapter cable (cod. 26900000000005) supplied as an accessory, for connecting the device to the external power supply unit (cod. 963GE020000046 - optional).

Assembly instructions

Connect the adapter cable to the power supply unit as follows:

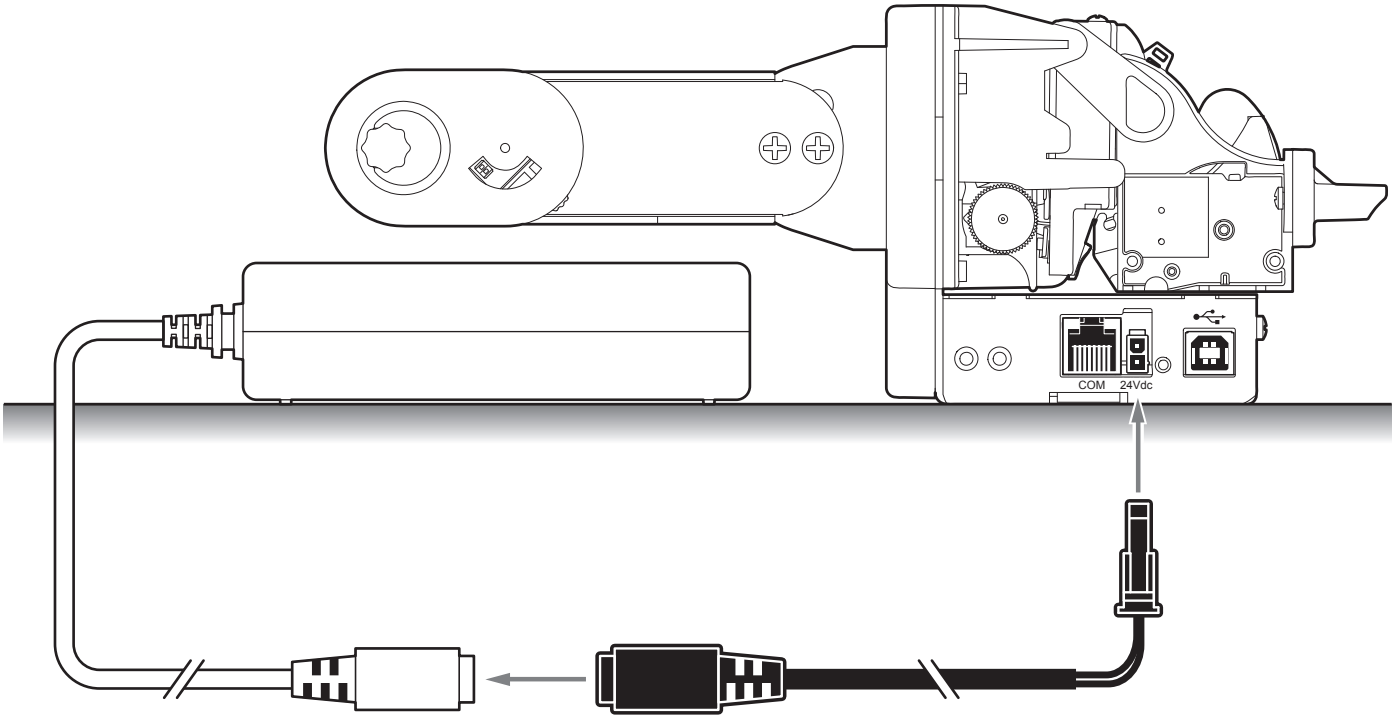

11 ALIGNMENT

The device is provided with a sensor for the use of alignment notch in order to handle rolls of tickets with pre-printed fields and a fixed length.

The alignment sensor is a “reflection” sensor: this kind of sensor emits a band of light and detects the quantity of light reflected to it. The presence of the notch is therefore detected by the amount of light that returns to the sensor, considering that the light is reflected by the white paper and absorbed by the black mark.

To ensure the correct alignment, you must enable the “B. Mark alignment” parameter during the Setup procedure (see chapter 6).

The following paragraphs show how to correctly set the configuration parameters of device in order to assure the alignment.

11.1 Calibration

The sensor calibration occurs automatically and consists in adjusting the quantity of light emitted to match the degree of whiteness of the paper used and the degree of black of the mark printed on paper.

The device automatically performs the self-calibration during the Setup procedure only if the “B. Mark alignment” parameter is set to a value other than “Disabled” (see chapter 6).

When self-calibration starts, the device performs some paper feeds and then it prints the calibration result and the value of the PWM duty-cicle of the alignment sensor driver so that it can be perform an optimal notch detection:

Autosetting b. mark : OK
PWM Duty Cycle : 85.3%]

The “Autosetting b. mark” parameter indicates the result of the self-calibration procedure; OK will appear if it has been successful, NOT OK will appear if the procedure has failed.

After the printing of the procedure result, the device offers the execution of the function of paper characterization “Characterize Paper” and the change of the “B. mark threshold” parameter which represents the detection threshold of the notch.

Choosing the “Yes” value for the “Characterize Paper” parameter, the device prints a graphic representation (see following figures) of the outgoing voltage of the alignment sensor (expressed as a percentage) and the “B. mark threshold” value. This graphic representation is useful to set the most suitable value to assign to the “B. mark threshold” parameter and then to better identify the optimal threshold value which takes into account the variations of the signal and the small oscillations around zero.

The following figure shows an example of paper with the non-thermal paper printed with black marks: the outgoing voltage is constant while passing the white paper between two notches and presents a peak at each black mark.
In this case, the optimal value for the “B. mark threshold” parameter is placed about half of the peak.

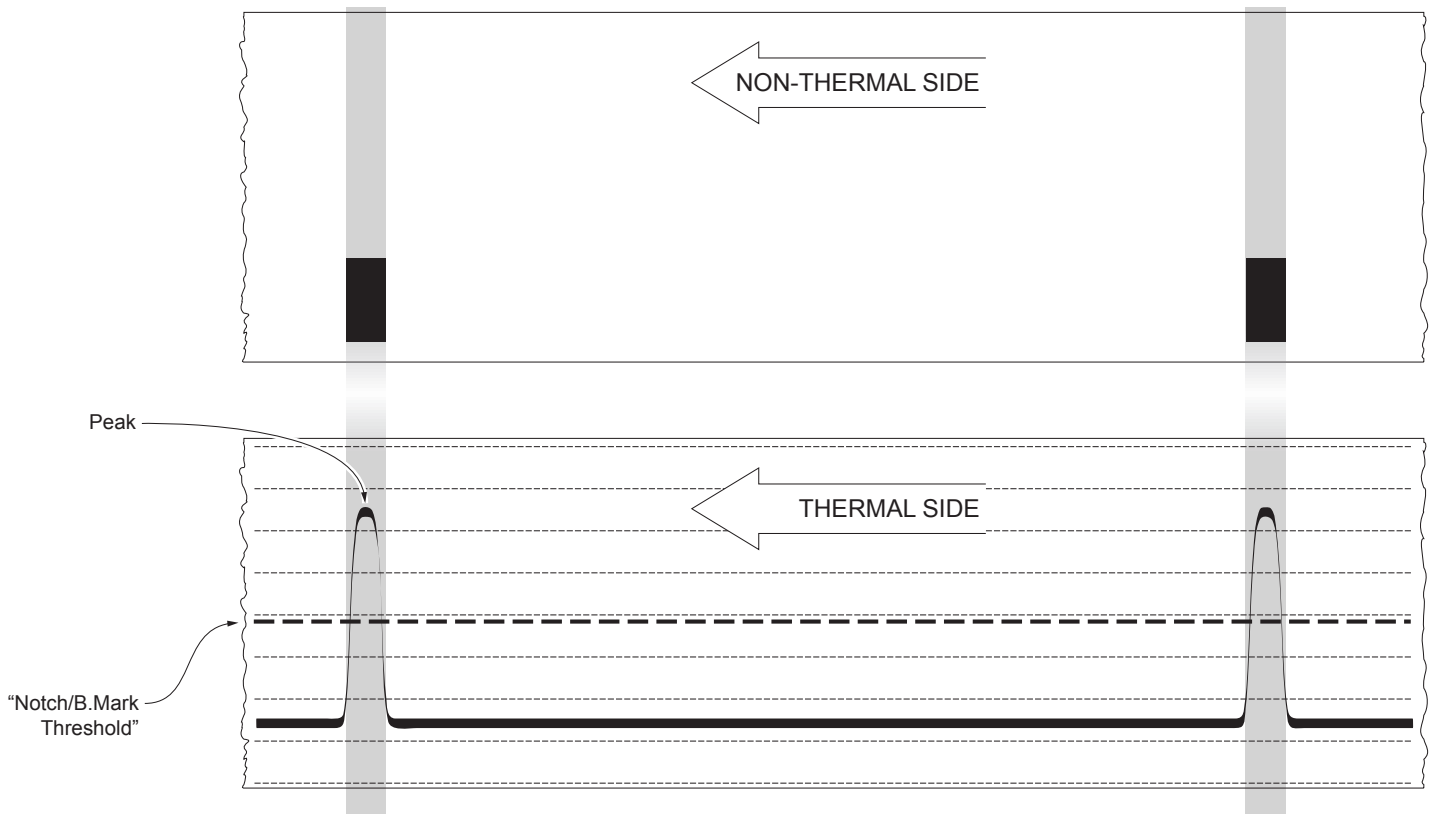

The following figure shows an example of paper with the non-thermal paper printed with black marks and other graphics (for example, a barcode): the outgoing voltage is constant while passing the white paper between two notches, presents a peak at each black mark and presents some “noise” at each barcode. In this case, the optimal value for the “B. mark threshold” parameter is located about halfway between the peak value and the maximum value of the “noise”.

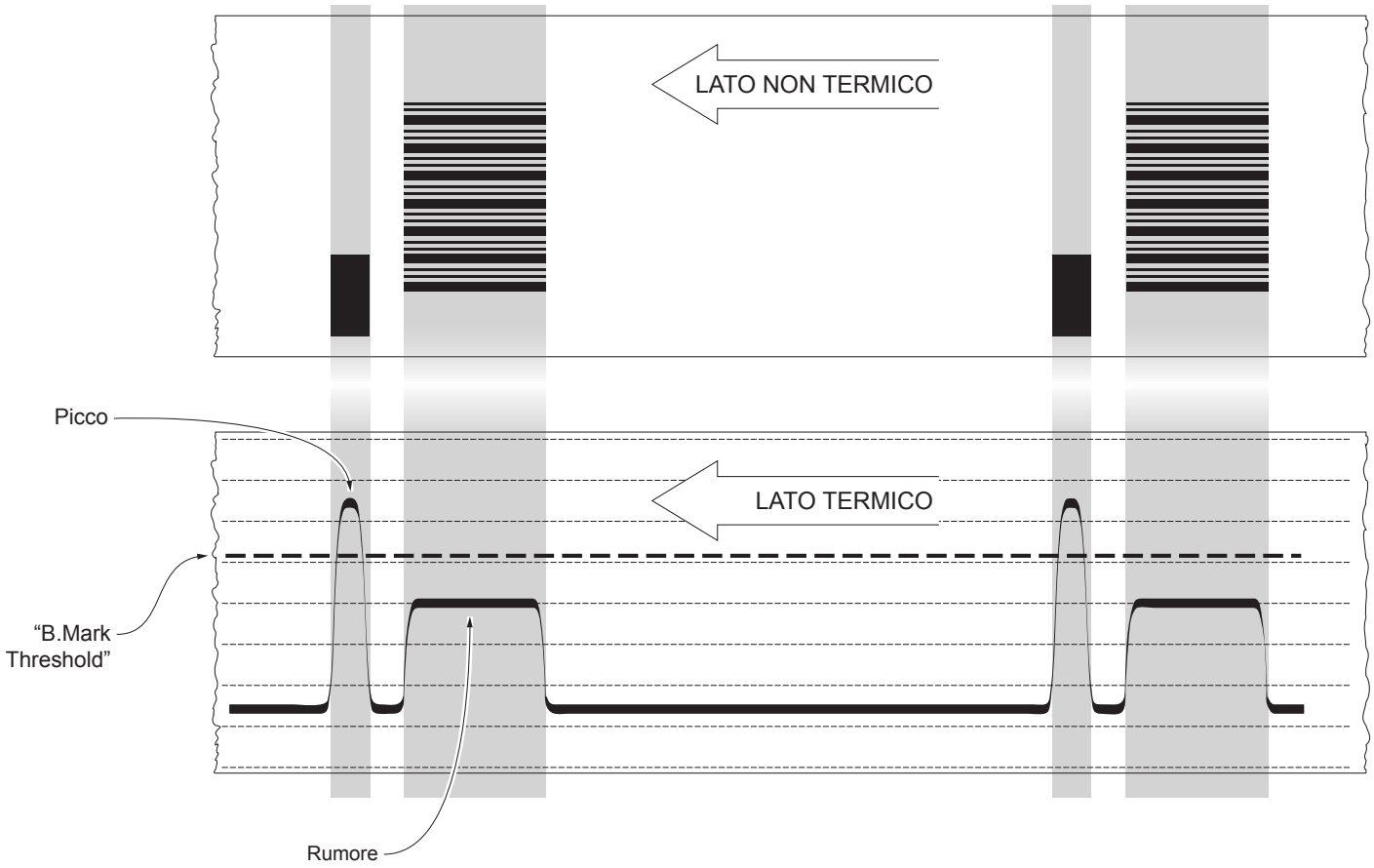

If the maximum value of “noise” read by the sensor is very close to the peak value, it might be difficult to place the value of the “B. mark threshold” at an intermediate point. In these cases, it is mandatory that the portion of paper between the point of printing end and the front notch is completely white (no graphics). In this way, the only next graphic detected by the sensor for alignment after the printing end will be the notch.

11.2 Alignment parameters

The “alignment point” is defined as the position inside the ticket to use for the notch alignment.
The distance between the notch edge and the alignment point is defined as “B. Mark distance”.

Referring to the front of the b. mark, the value of “B. Mark distance” varies from 0mm minimum and 12.9mm maximum.

If the “B. Mark distance” value is set to 0, the alignment point is set at the beginning of the notch.

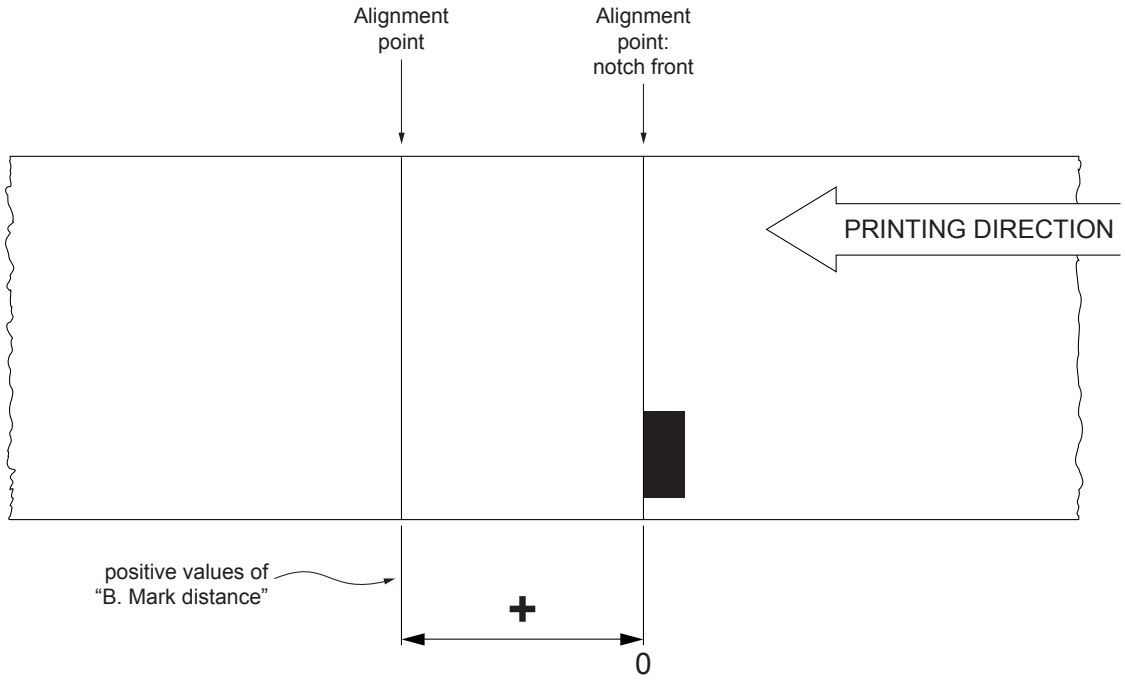

The following figure shows a section of the device with the paper path and the distances between the alignment sensor, the printing head and the cutter (cutting line), where

A = distance between the alignment sensor and the printing line = 12 mm

B = distance between the printing line and the cutting line = 12.5mm

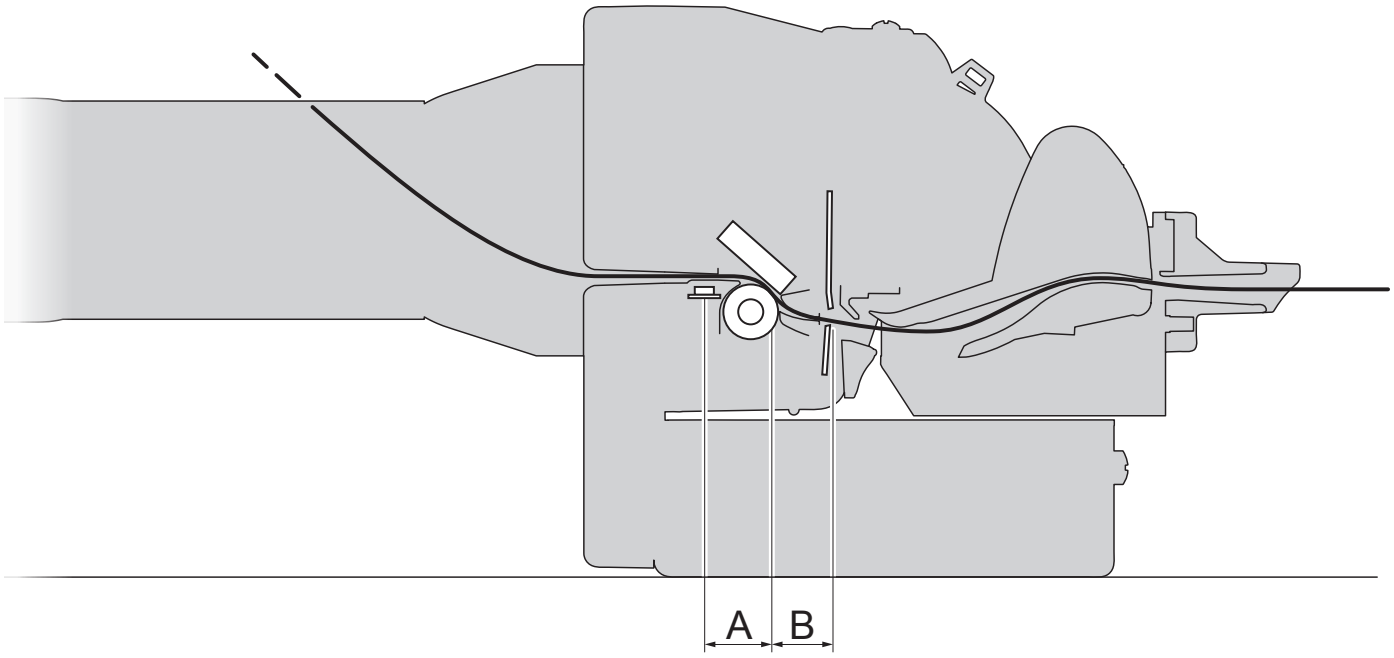

CUSTOM/POS emulation

To define the alignment point you need to set the device parameters that compose the numerical value of the “B. Mark distance” parameter (see paragraph 6.4).
For example, to set a notch distance of 10mm between the notch and the alignment point, the parameters must be set on the following values:

B. Mark *distance [mm x 10]* : 1
B. Mark *distance [mm x 1]* : 0
B. Mark *distance [mm x .1]* : 0

The “B. Mark distance” parameter, may be modified as follows:
- during the Setup procedure of the device (see chapter 6)
- by using the 0x1D 0xE7 command (for more details, refer to the Commands Manual)
- by driver.

11.3 Printing area

In order to print ticket containing only one notch and to not overlay printing to a notch (that will make it useless for the next alignment), it is important to well calibrate the length of the printing area of ticket according to the inter-notch distance.

The following figure shows an example of tickets with “B. mark distance” set to 0:

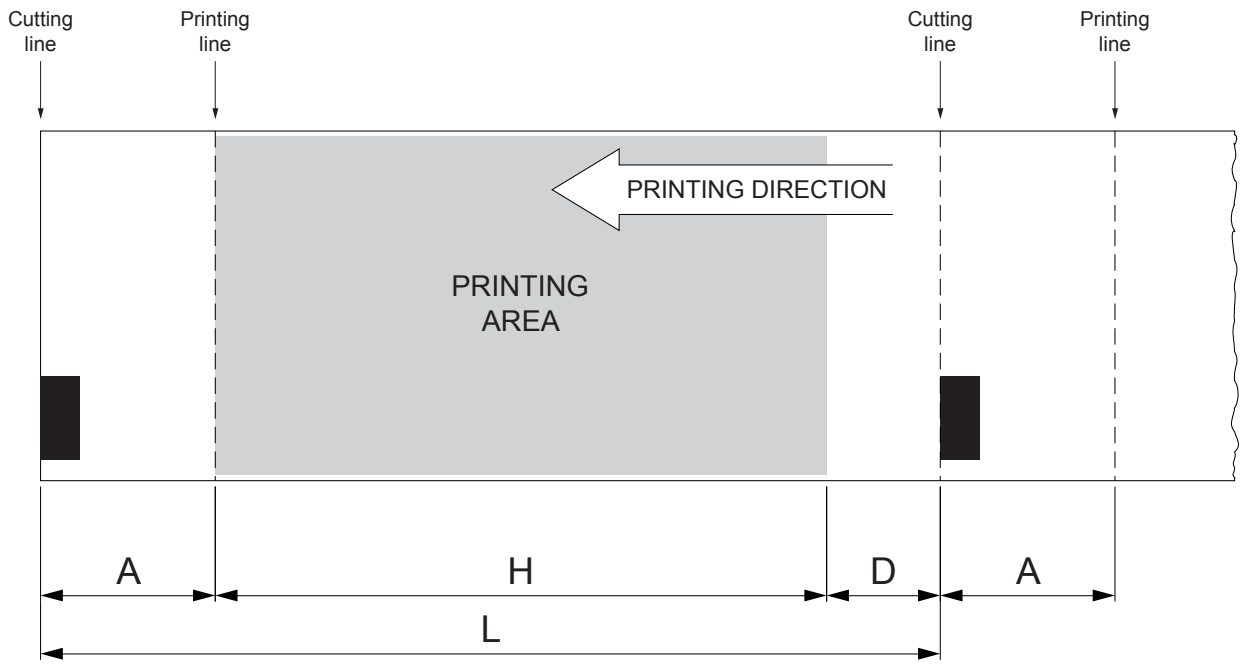

A “Non-printable area” = “Distance between cutter/printing head”

where:
“Distance between cutter/printing head” = 12 mm

H Distance between the first and the last print line, called “Height of the printing area”.

L Distance between an edge of the notch and the next one, called “Inter-notch distance”.

D Automatic feed for alignment at the next notch.

To use all the notches on the paper, you must comply with the following equation:

$$H + A \leq L$$

The height of the printing area H can be increased to make no progress on alignment D but no further.

12 TECHNICAL SERVICE

In case of failure, send the 4 pieces of information listed below to our support team:

1. Product code
2. Serial number
3. Hardware release
4. Firmware release

To get the necessary data, proceed as follows:

1

XXXXXXXXXXXXXX Rx

0000000000000000000

Write down the data printed
on the product label (see paragraph 1.3)

2

FW

TG2480H printer - rel 1.00

PRINTER SETUP

PRINTER TYPE	=	TG2480H
BOOT LOADER	=	rel.1.00
BCODE	=	<code>
SCODE	=	<code>
HEAD VOLTAGE [V]	=	23.57
HEAD TEMP. [°C]	=	24
CUT COUNTER	=	0
POWERON COUNTER	=	100
PAPER PRINT [cm]	=	160
PWM B. MARK AVG.	=	50%

Print a Setup report (see paragraph 4.1)
The Setup report shows
the firmware release

3

Customer Service Department:

support@custom.it
(worldwide)

or

support@customamerica.com
(specific for North/South American customers)

Send an e-mail to the Technical Service,
with the data collected

Part Number : 7620000001800 Rev.2.80

CUSTOM S.p.A.
World Headquarters
Via Berettine, 2/B - 43010 Fontevivo, Parma ITALY
Tel. +39 0521 680111 - Fax +39 0521 610701
info@custom.biz - www.custom.biz

All rights reserved